Invitation for Bids
For
Burke Outdoor Lighting Upgrades
For the City of Chelsea, MA

Project # 2015-105

December 2014

IFB Contact:	City of Chelsea, MA Dylan Cook Chief Procurement Officer City Hall 500 Broadway, Room 206 Chelsea, MA 02150
Telephone Number:	617-466-4220
Fax Number:	617-466-4225
E-Mail:	dcook@chelseama.gov

Table of Contents

Section 1 Procurement Scope

1.1 Authority
1.2 Modify, Withdraw and Amend Responses
1.3 Bid Security
1.4 Bid Bonds
1.5 Familiarity with Requirements
1.6 Independent Party
1.7 Conflict of Interest
1.8 Political Activity Prohibited
1.9 Assignment by the Contractor
1.10 Subcontracting
1.11 Choice of Law
1.12 Notices
1.13 Severable Sections Do Not Effect Entire Contract
1.14 Liquidated Damages for Failure to Enter into Contract
1.15 Liquidated Damages for Failure to perform Under Terms of the Contract
1.16 Contract Performance
1.17 Prevailing/Minimum Wage Rates
1.18 Funding & Fiscal Appropriation
1.19 Procurement Calendar
1.20 Duration of Contract

Section 2 General Bid Information

2.1 Required IFB Sections
2.2 Minority or Woman Business Enterprise Participation
2.3 Contract Award
2.4 ADA, Regulatory Compliance and Standards
2.5 Indemnification
2.6 Federal, State and Local Laws
2.7 Tax Exempt
2.8 Insurance
2.9 Confidentiality
2.10 Force Majure
2.11 Equal Opportunity
2.12 Termination
2.13 Obligation in the Event of Termination
2.14 Ownership of Furnishings and Equipment
2.15 Anti-Boycott Warranty

Section 3 Bid Information

3.1 Bidder Communication
3.2 Reasonable Accommodation
3.3 Public Records
3.4 Brand Name or Equal
3.5 Publicity
3.6 Costs
3.7 Required Contract Attachments and City of Chelsea Forms
3.8 Submitted Bids
3.9 Clarification of Bids
3.10 Evaluation and Award of Contract
3.11 Rejection of Bidder's Bid
3.12 Bid Cancellation
3.13 No Guarantee of Purchase
3.14 Prime Contractors and Subcontractors
3.15 Written Inquiries
3.16 Instructions for Submission of Bid Responses
3.17 Deadline for Submission

Section 4 Scope of Services

Section 01000 – Summary
Section 16050 – Basic Electrical Materials and Methods
Section 16120 Insulated Wire and Cable
Section 16450 – Grounding
Section 16500 – Lighting

MANDATORY SUBMITTALS:

BIDDER INFORMATION FORM (To be first page of Bid)
CITY OF CHELSEA BID FORMS
OSHA COMPLIANCE CERTIFICATION
STATEMENT OF CORPORATE AUTHORITY (If responder is a Corporation)

IFB ATTACHMENTS: MASSACHUSETTS PREVAILING WAGE RATES

SAMPLE CITY OF CHELSEA CONTRACT FOR SERVICES OVER $10,000

(Legal Notice)

CITY OF CHELSEA
INVITATION FOR BIDS
Burke Outdoor Lighting Upgrades

Sealed bids to furnish all labor and materials for Repair and Maintenance of Traffic Signals will be received at the Office of the Chief Procurement Officer, City Hall, Room 206, Chelsea, Massachusetts until 10:00 AM on Friday, January 16, 2015 immediately after which the bids will be opened and read publicly.

Specifications and contract documents will be available on or after December 18, 2014 via email to dcook@chelseama.gov or at the Office of the Chief Procurement Officer, City Hall, Room 206, Chelsea, Massachusetts.

Bids must be sealed and clearly marked **"Burke Outdoor Lighting Upgrades"**.

A MANDATORY Pre-Bid Conference will be held on-site, 300 Crescent Ave., on Thursday, January 8, 2014 at 10:00am. Attendance is required, in order to bid.

Each bid must be accompanied by a certified check, issued by a responsible bank or trust company. Or a bid bond duly executed by the bidder as principal and having as surety thereon a surety company approved by the City, all in the amount of 5% of the bid payable to the "City of Chelsea."

The City of Chelsea reserves the right to accept any bid, to reject and/or all bids and to waive minor irregularities and/or formalities as it deems to be in the best interest of the City.

In accordance with our Minority Business Enterprise Plan, we are inviting all qualified women and minority business firms to respond.

This invitation for bid is in accordance with M.G.L. Chapter 30, §39M.

Dylan Cook
Chief Procurement Officer

Section 1 Procurement Scope

The City of Chelsea MA is publishing this Invitation for Bids for a qualified contractor to provide services, equipment, tools and labor for **Burke Outdoor Lighting Upgrades.**

1.1 Authority

Invitation for Bid Procedures and award of the Contract shall be in accordance with Massachusetts General Law, Chapter 30, s. 39M, plus all applicable Federal, State and Local laws and regulations.

1.2 Withdraw , Modify, and Amend Bids

Bidders who wish to withdraw, modify or amend their bid must do so in writing utilizing electronic mail to the City of Chelsea Chief Procurement Officer at dcook@chelseama.gov or via fax at 617-466-4225, no later than the time and date set forth herein for the receipt of the bids. All such withdrawals, modifications or amendments must so state in the subject line of the email correspondence. Any withdrawal, modification or amendment arriving after the date and time set forth for accepting responses will not be considered. After the opening of the bids, a bidder may not change any provision of the bid in a manner prejudicial to the interests of the City of Chelsea or fair competition. Minor informalities will be waived at the discretion of the City of Chelsea.

1.3 Bid Security Deposit

Each bid must be accompanied by a certified check of the bidder or a bid bond duly executed by the bidder as principal and having as surety t hereon a surety company approved by the City, in the amount of 5% of the bid, payable to the "City of Chelsea" and must be filed with the original bid.

Within 30 days, Saturdays, Sundays and legal holidays excepted, after the formal opening of bids, such deposit will be returned within seven working days after the execution of the contract by the successful bidder. The deposit will be returned to the successful bidder upon delivery of a satisfactory Performance Bond and Payment Bond.

1.4 Bid Bonds

The successful bidder is required to furnish a payment bond in the contract amount and with surety satisfaction to the City, in an award form this Invitation for Bids. The Bidder must pay all costs. The **Payment Bond** shall be in the sum of **100%** of the contract price. The **Performance Bond** shall be in the sum of **100%** of the contract price. The bond shall be provided by the successful bidder to the City within five business days of the contract award.

Should the successful bidder fail or refuse to execute and deliver the contract with the Payment Bond within the required seven working days after he/she has received notice of the acceptance of this bid, he/she shall forfeit to the Owner, as liquidated damages for such failure or refusal, the security deposit with his/her bid.

1.5 Familiarity with Requirements

Bidders are to thoroughly familiarize themselves with the requirements of this Invitation for Bids. Ignorance of the requirements will not relieve the bidder from any obligations or liabilities of any contract(s) issued as a result of this Invitation for Bids.

1.6 Independent Party

Under this Invitation for Bids, the successful bidder declares itself to be at all times acting and performing as an independent party and nothing in this Invitation for Bids or any subsequent contract(s) is intended to constitute a partnership or joint venture between the Bidder and the City of Chelsea.

1.7 Conflict of Interest

No officer or employee of the City of Chelsea shall participate in any decision relating to any contract which would affect their financial or personal interest or the interest of any corporation, partnership, sole proprietorship or association in which they are directly or indirectly interested.

1.8 Political Activity Prohibited

None of the services to be provided by any bidder shall be used for any partisan political activity or to further the election of any candidate for public office.

1.9 Assignment by Contractor

The successful bidder or contractor shall not assign in whole or in part or otherwise transfer any interest in any contract without the written consent of the City of Chelsea, provided however, that the present and prospective claims for money due owing to the Contractor from the City of Chelsea or any other Buyer may be assigned to a bank or trust company or to a financial institution insured by the Federal Deposit Insurance Corporation (FDIC) without such consent so long as notice of such assignment is promptly furnished to the City of Chelsea. Any complete or partial assignment of the contractor's or successful bidder's interest in any such contract shall require the assignee, at the City of Chelsea's discretion, to supply such further information as the City of Chelsea deems necessary to comply with the City of Chelsea rules and regulations governing contracts for services. Any such assignment, in whole or in part, shall also be expressly made subject to all defenses, set-offs or counter claims which would have been made available to the City of Chelsea against the successful bidder in the absence of such assignment.

1.10 Subcontracting

None of the services to be provided by the contractor pursuant to any contract shall be subcontracted or delegated in whole or in part to any other organization, association, individual, corporation, partnership, or any other such entity without the prior written approval of the City of Chelsea. All intended subcontracts must be in writing and must be submitted with the bid documents. All intended subcontracts shall be provisions, which are functionally identical to and consistent with the language of this Invitation for Bids.

1.11 Choice of Law

Any contracts awarded as a result of this Invitation for Bids shall be construed under the laws of the Commonwealth of Massachusetts. The successful bidder and agents thereof agree to bring any federal or state legal proceedings arising from any such contract in which the City of Chelsea is a party in a court of competent jurisdiction within the Commonwealth of Massachusetts. This section shall not be construed to limit any rights any party may have to intervene in any action in any court or wherever pending in which the other is a party.

1.12 Notices

Unless otherwise specified, any notice hereunder shall be in writing and shall be deemed delivered when sent via electronic mail (e-mail), given in person to either party or deposited in the U.S. Mail, postage prepaid and addressed to the persons indicated in any contract or as specified by any amendment hereto.

1.13 Severable Sections Do Not Affect Entire Contract

If any provision of the Invitation for Bids or any subsequent contract is declared or found to be illegal, unenforceable or void, then both parties shall be relieved of all obligations under the provision. The remainder of the Invitation for Bids and any subsequent contract shall remain in full force and effect and enforceable to the fullest extent provided by law.

1.14 Liquidated Damages for Failure to Enter into Contract

The successful bidder, upon its failure or refusal to execute and deliver the Contract, Bond and Certificates of Insurance required within ten days after receipt of notice of the acceptance of the bid, shall forfeit to the City of Chelsea, as liquidated damages for such failure or refusal, the security deposited with its bid, provided that the amount forfeited shall not exceed the difference between its bid price and the bid price of the next lowest responsive and responsible bidder. In case of death, disability, bonafide clerical or mechanical error of a substantial nature or similar unforeseen circumstances affecting the bidder, its bid deposit shall be returned.

1.15 Liquidated Damages for Failure to Perform Under Terms of the Contract

Should the successful bidder fail to commence or diligently perform according to the terms of the contract, the successful bidder agrees to pay to the City of Chelsea, as liquidated damages, Two Hundred Fifty Dollars ($250.00) per calendar day that the successful bidder fails to commence or diligently perform the work in accordance with the contract documents and/or is in violation of the contract. Liquidated damages assessed under this provision shall be deducted from any payment(s) due to the successful bidder.

1.16 Contract Performance

The failure of any party to insist in any one or more situations, upon performance of any of the terms or provisions of any part of this Invitation for Bids or resulting contract shall not be considered as a waiver or relinquishment of the right of either party to future performance of any such term or provision, and the rights and obligations of the parties to such future performance shall continue in full force and effect.

1.17 Prevailing/Minimum Wages

Prevailing/Minimum Wage Rates as determined by the Commissioner of the Division of Occupational Safety of the Executive Office of Labor and Workforce Development under the provisions of Massachusetts General Laws Chapter 149, Section 26 to 27D, as amended, apply to this project. It is the responsibility of the Bidder, before the bid opening, to request, if necessary, any additional information on Prevailing/Minimum Wage Rates for those trades people who may be employed for the proposed work under this contract.

1.18 Funding & Fiscal Year Appropriation

Appropriations for expenditures by the City of Chelsea and authorizations to spend for a particular purpose are ordinarily made on a fiscal year basis. The fiscal year for the City of Chelsea, MA begins on July 1st and ends June 30th of the following year. The obligations of the City of Chelsea under any contract resulting from this Invitation for Bids for any subsequent fiscal year following the fiscal year in which the initial contract is awarded is subject to the appropriations to the City of Chelsea of funds sufficient to discharge its obligations, which accrue in such subsequent fiscal year, and to the authorization to spend such funds for the purposes of this Invitation for Bids. In the absence of such appropriation or authorization, any contract resulting from this Invitation for Bids shall be terminated immediately without liability for damages, penalties or other charges arising from early termination. Expenditures for contracted services, which will extend beyond a single fiscal year shall not exceed in any fiscal year the amount appropriated and authorized for the said fiscal year.

1.19 Procurement Calendar

The City of Chelsea solicits bids that will result in a contract. The schedule of events for this solicitation, subject to amendment by the City of Chelsea is:

Event	Date
IFB Released	December 18, 2014
Deadline for Written Inquiries	January 12, 2015 at 10:00am
Response to Written Inquiries	January 13, 2015
Due Date for Bids	January 16 at 10:00am

1.20 Duration of Contract

The initial contract term will commence upon signature and end NO LATER THAN December 31, 2015.

End of Section

Section 2 General Bid Information

2.1 Required IFB Sections

The Bidder must provide, in its bid, a reply to the particular specifications included in the Invitation for Bids.

2.2 Minority or Woman Business Enterprise Participation

In accordance with the Minority Business Enterprise Plan for the City of Chelsea, all qualified Minority-Owned Business Enterprises (MBE) or Woman-Owned Business Enterprises (WBE) are strongly encouraged to submit bids in response to this Invitation for Bids. For the purpose of this IFB, the term MBE or WBE shall mean a vendor who is certified as a minority business enterprise by the State Office of Minority and Women-Owned Business Assistance (SOMWBA), and who is certified at the time the vendor's bid is submitted.

All minority owned businesses are encouraged to apply for SOMWBA certification. For further information on SOMWBA qualifications or access to SOMWBA vendor lists, contact the Supplier Diversity Office, Commonwealth of Massachusetts Operational Services Division at 617-720-3300.

2.3 The Contract Award

Based upon the bids received, the contract will be awarded to the lowest responsive and eligible bidder. The determination of "responsive and eligible bidder" will take into consideration the proposal, references, experience, and the projected cost.

2.4 ADA, Regulatory, Compliance and Standards

Bidders are expected to provide services and commodities that are in compliance with Section 504 of the Federal Rehabilitation Act of 1973, the Americans with Disabilities Act of 1990, the Telecommunications Act of 1996, and all successor federal and related legislation throughout the term of any contract resulting from this solicitation.

2.5 Indemnification

Any successor in exchange for entering into an agreement or contract resulting from this Invitation for Bids shall indemnify and hold harmless the City of Chelsea and all persons acting for or on behalf of either of them from all suits and claims against them, or either of them, arising from or occasioned by the use of any service, material, equipment or apparatus, or any part thereof, which infringes or is alleged to infringe on any patent rights. In case such service, material, equipment or apparatus, or any part thereof in any suit is held to constitute infringement, the successful bidder, within a reasonable time, will at its expense, and as the City of Chelsea may elect, replace such material, equipment or apparatus with non infringing material, equipment or apparatus or remove the material,

equipment or apparatus and refund the amounts paid therefore. Said indemnification includes reasonable attorney's fees related thereto.

Furthermore, any successful bidder in exchange for entering into any agreement or contract resulting from this Invitation for Bids agrees to indemnify and hold harmless, release and forever discharge the City of Chelsea as well as their officers, agents and employees as well as their successors and assigns from any and all manner of actions, suits, claims, demands, judgments, damages and liability in law and in equity which may arise or result from performance under this contract. This includes any discrimination, labor or employment claims against the successful bidder and the City of Chelsea and any and all manners of legal action brought against the successful bidder and /or the City of Chelsea. Said indemnification includes reasonable attorney's fees related thereto.

2.6 Federal, State and Local Laws

The successful bidder will comply with all applicable Federal, State and Local laws and regulations.

2.7 Tax Exempt

Purchases made by municipalities and government are exempt from Federal Excise Taxes and Massachusetts Sales Taxes and bid prices must show the exclusion of such taxes. Tax exemption certificates will be furnished as required.

2.8 Insurance

The successful bidder in addition to any insurance required by State or Local Law, shall maintain in force during the term of any contract(s) issued as a result of this Invitation for Bids, the following insurance issued by an insurance company licensed to do business in the Commonwealth of Massachusetts. Failure to provide or maintain such insurance shall be grounds to reject a bid or execute a contract.

a. Public Commercial Liability coverage in the amount of $1,000,000.00 per occurrence and $2,000.000.00 aggregate. Automobile Liability Insurance coverage in the amount of $500,000.00 per person, $1,000,000.00 per occurrence. Property damage Insurance in the amount of $250,000.00.
b. Worker's Compensation Insurance in the amounts required by Massachusetts Law.
c. Evidence of such insurance must name the City of Chelsea as the named insured as well as the successful bidder.
d. An Insurance Certificate giving evidence of the insurance must be delivered to the City of Chelsea within 10 days by the successful bidder receiving the award of this Invitation for Bids.

2.9 Confidentiality

The successful bidder will comply with all provisions of Executive Order No. 11246 of September 24, 1975 and the successful bidder acknowledges that in performance of any contract resulting from the Invitation for Bids it may require or have access to "personal data" and become a "holder" of personal data as defined by M.G. L. c. 66A. The successful bidder shall comply with all laws and regulations relating to confidentiality and privacy, including but not limited to any rules and regulations of the City of Chelsea. The successful bidder shall at all times recognize the City of Chelsea's ownership of personal data and the exclusive right and jurisdiction of the City, and "data subjects" (as defined in chapter 66A) to control the use of personal data. The successful bidder shall immediately notify the City of Chelsea both orally and in writing if any personal data in its possession is subpoenaed, improperly used, copied or removed by anyone except an authorized representative of the City of Chelsea. The successful bidder shall cooperate with the City of Chelsea in taking all steps it deems advisable to enjoin, misuse, regain possession and/or otherwise protect the City of Chelsea's rights and data subject's privacy. The successful bidder shall allow access to any personal data held in their possession solely to those employees of the City of Chelsea who require such information in the performance of their occupational responsibilities. All personal data held by the successful bidder shall be delivered to the City of Chelsea within 14 calendar days after termination of any contract resulting from this Invitation for Bids. The successful bidder agrees to take reasonable steps to insure the physical security of such data under its control, including but not limited to fire protection, protection against smoke and water damage, alarm system, locked removal of manually held data, passwords, access logs, badges or other methods reasonably expected to prevent loss or unauthorized access to electronically or mechanically held data, limited terminal access, access to electronically or mechanically held data, limited terminal access, access to input documents and design provisions to limit use of personal data. The successful bidder agrees that it will inform each of its employees having any involvement with their personal data or confidentiality. The City of Chelsea shall have access at all times to any data maintained pursuant to any contract resulting from this Invitation for Bids, without the consent of the data subject. The successful bidder shall use personal data, and material derived from such data, only as necessary for the performance of the subject contract. Failure of the successful bidder to comply with the requirements of this section may be grounds for terminating any contract resulting from this Invitation for Bids.

2.10 Force Majure

Neither the City of Chelsea nor the successful bidder shall be liable to the other, nor deemed to be in breach of any contract resulting from this Invitation for Bids for failure or delay in rendering performance rising out of causes factually beyond its control and without its fault or negligence. Such causes may include, but are not limited to, Acts of God or the public enemy, wars, fires, flood, epidemics, quarantine restrictions, strikes, unforeseen freight embargos or unusually severe weather. Dates of times of performance shall be extended to the extent of delays excused by this section, provided that the party whose performance is affected notifies the other party promptly of the existence and

nature of such a delay. It is agreed that since the performance dates of the subject contract are of the essence and important to the implementation of essential City of Chelsea work, continued failure to perform for periods aggregating 45 or more calendar days, even for causes beyond the control of the successful bidder, shall afford the City of Chelsea the right to terminate any contract resulting from this Invitation for Bids without assessment of termination costs or penalties.

2.11 Equal Opportunity

During the performance of this contract, the successful bidder agrees as follows:

a. The successful bidder will not discriminate against any employee or applicant for employment because of race, religion, color, sex or national origin, sexual orientation, which shall not include persons whose sexual orientation involves minor children as the sex object, genetic information or ancestry. The successful bidder will take affirmative action to ensure that applicants are employed and that the employees are treated during employment without regard to their race, religion, color, sex, nation origin or sexual orientation, which shall not include persons whose sexual orientation involves minor children as the sex object, genetic information or ancestry.
b. The successful bidder will comply with all provisions of Executive Order No. 11246 of September 24, 1975 and all of the rules, regulations and relevant orders of the Secretary of Labor.

2.12 Termination

The bidders for this Invitation for Bids should note that the City of Chelsea reserves the right to terminate any contract resulting from this Invitation for Bids in whole or in part, by written notice:

- **Without cause**: Either party may terminate the subject contract by giving written notice to the other party at least 60 calendar days prior to the normal contractual effective date of termination as stated or such other period as is mutually agreed upon in advance by the parties

- **For cause**: If, in the opinion of the City of Chelsea, the successful bidder fails to fulfill its obligations, the City of Chelsea may terminate any contract resulting from this Invitation for Bids by giving 30 days written notice to the successful bidder at any time. The subject contract shall be terminated immediately in the event of fraud or program abuse.

- **Emergency**: The City of Chelsea may terminate or suspend any contract resulting from this Invitation for Bids up to 60 calendar days by providing written notice to the successful bidder, stating the grounds for the City of Chelsea's action, in the form of U.S. Mail, hand-carried letter, or other appropriate written means, if the City of Chelsea determines that immediate action is necessary to

protect City, State and/or Federal funds or property, or to protect persons from injury. Such termination or suspension shall be effective upon receipt of notice of either suspension or termination by the successful bidder. In the case of a suspension under this paragraph, the notice of suspension shall be accompanied by instructions from the City of Chelsea specifying requisite actions by the successful bidder to remove the suspension, proposed timetable for meeting those requirements and a description by the City of Chelsea of allowable activities and costs, if any, during the suspension period. Failure by the successful bidder to remedy the stated deficiencies according to the timetable prescribed by the City of Chelsea shall be cause for immediate termination.

- **Elimination or Reduction of Funding**: In the event of a reduction of funding for any reason, the City of Chelsea may terminate any contract resulting from this Invitation for Bids by providing notice of termination in a reasonable time. The City of Chelsea may provide a conditional notice of termination with a proposed amendment to the subject contract. Any such notice shall provide that the subject contract will terminate automatically 30 calendar days after the date of the conditional notice of termination unless the successful bidder submits to the City of Chelsea a properly signed copy of the amendment, or such modification form of amendment as may be agreeable to the City of Chelsea, within 20 calendar days after the date of the conditional notice of termination, or such other time as it is otherwise specified in the conditional notice.

- **Office's Remedies:** Upon Termination for Cause or for Emergencies: Notwithstanding the terms contained in this section, in the event of termination, the successful bidder shall not be relieved of liability to the City of Chelsea by virtue of any breach of any contract resulting from this Invitation for Bids by the successful bidder. In the event of termination pursuant to this section, the City of Chelsea may withhold any payments to the successful bidder for the purpose of set-off until such time as the exact amount of damages due to the City of Chelsea from the successful bidder is determined. In addition to and notwithstanding the above, the successful bidder covenants and agrees that in the event of termination of any contract resulting from this Invitation for Bids the successful bidder shall pay to the City of Chelsea as damages: (a) such sum as, at the time of termination, the City of Chelsea reasonably determines that is, shall require to compensate a subsequent contractor to complete the delivery of service, and (b) the sum, reasonably determined by the City of Chelsea, which will compensate the City of Chelsea for all the direct and indirect costs resulting from delay in the delivery of services upon the successful bidder's default. The successful bidder further covenants and agrees with the City of Chelsea that the successful bidder shall pay all of the City of Chelsea's costs and expenses (including attorney's fees) incurred or paid in obtaining and enforcing any court order favorable to the City of Chelsea for any obligation of the successful bidder under any contract resulting from this Invitation for Bids.

2.13 Obligation in the Event of Termination

Upon termination of any contract resulting from this Invitation for Bids, all documents finished or unfinished, data, studies and reports prepared by the successful bidder pursuant to the subject contract shall become the property of the City of Chelsea. Copies of finished and unfinished documents, data, studies and reports generated as a necessary part of performing the subject contract shall be delivered to the City of Chelsea upon reasonable request and shall be retained by the successful bidder for future use. The City of Chelsea shall promptly pay the successful bidder for all services performed and for all costs and un-cancelable commitments reasonably incurred in performance of the subject contract to the effective date of termination, provided the successful bidder is not in default of the terms of the subject contract and submits to the City of Chelsea properly completed invoices with supporting documentation covering such services no later than 45 days after the effective date of termination, and that the successful bidder make every reasonable effort to minimize or recover costs incurred.

2.14 Ownership of Furnishings & Equipment:

Unless otherwise provided by law or a federal grant award, title to all furnishings and equipment provided by the City of Chelsea or that the awarded bidder provides under the terms of this Invitation for Bids and paid for with public funds, shall vest in and be retained by the City of Chelsea. Upon completion of performance of the awarded bidder's contract, the awarded bidder shall return such furnishings and equipment in its possession in the same condition as at the commencement of any contract resulting from this Invitation for Bids, normal wear and tear excepted.

2.15 Anti-Boycott Warranty:

During the term of any contract resulting from this Invitation for Bids, neither the successful bidder nor any "affiliated company" as hereafter described, shall participate in or cooperate with an international boycott, as defined in section 999(b) (3) and (4) of the Internal revenue Code of 1954, as amended by the Tax Reform Act of 1986, or engage on conduct declared to be unlawful by sections 2 and 4 of Chapter 151E of The Massachusetts General Laws. As used herein, an "affiliated company" shall be any business entity or which at least 51% of the ownership interests are directly or indirectly owned by the successful responder or by a person or persons or business entity or entities which directly own at least 51% of the ownership interest of the successful bidder.

End of Section

Section 3 Bidder's Bid Information

3.1 Bidder Communications

Bidders are prohibited from communicating directly with any employee of the Purchasing Department and any other member of the City of Chelsea except as specified in this Invitation for Bids, and no other individual City of Chelsea employee or representative is authorized to provide any information or respond to any question or inquiry concerning this Invitation for Bids. Bidders may contact the person identified on the cover sheet of this Invitation for Bids in the event this Invitation for Bids is incomplete.

3.2 Reasonable Accommodation

Bidders with disabilities or hardships that seek reasonable accommodation, which may include the receipt of the Invitation for Bids information in an alternative format, must communicate such requests in writing, via electronic mail (e-mail) to the contact person. Requests for accommodation will be addressed on a case by case basis. A bidder requesting accommodation must submit a written statement, via e-mail which describes the responder's disability and the requested accommodation to the contact person for the Invitation for Bids. The City of Chelsea reserves the right to reject unreasonable request.

3.3 Public Records

All bids and information submitted in response to this Invitation for Bids are subject to the Massachusetts Public Record Law, M.G.L., Chapter 66, Section 10, and to Chapter 4, Section 2, Subsection 26. Any statements in the bidder's bid inconsistent with these statutes will be disregarded.

3.4 Brand Name or Equal

Unless otherwise specified in this Invitation for Bids, any reference to a particular trademark, trade name, patent, design, type, specification, producer or supplier is not intended to restrict this Invitation for Bids to any manufacturer or proprietor or to constitute an endorsement of any good or service, and the City of Chelsea must consider clearly identified offers if substantially equivalent goods and services submitted in response to such reference.

3.5 Publicity

Any bidder awarded a contract under this Invitation for Bids is prohibited from selling or distributing any information collected or derived from the contract, including lists of participating or eligible departments, employee names, telephone numbers, e-mail addresses, addresses or any other reports or information except as specifically authorized under this contract.

3.6 Costs

Costs for services that are not specifically identified in the bidder's response and identified as part of a contract, will not be compensated under any contract awarded pursuant to this Invitation for Bids.

The City of Chelsea will not be responsible for any costs or expenses incurred by responders responding to this Invitation for Bids.

3.7 Required Contract Attachments

All bidders are required to complete, sign and return at minimum the following documents:

Bid Cover Sheet- to be included as cover page of bid

Vote of Corporation (If Bidder is a Corporation) - If the bidder is a Corporation, a vote of the Corporation approving participation in this Invitation for Bids process must be signed by the corporate officers with the Corporate Seal Affixed and attached to the original Invitation for Bids.

If the bidder is a Corporation, the names and addresses of the corporate Officers and the state and date of incorporation must be included. The bidder must state if the Corporation is publicly held or privately held. If the Corporation is publicly held, the exchange on which it is traded and the symbol under which it is traded is required.

Sole Proprietorship (If Bidder is a Sole Proprietorship)- If the bidder is a Sole Proprietorship, a partnership or any other legal business entity, the names and addresses of the officers must be included, the parent state of business and the numbers of years this entity has been in business. In short, a complete business profile must be included in the bid.

WEEKLY PAYROLL RECORDS REPORT - In accordance with Massachusetts General Law chapter 149, Section 27B, a true and accurate record must be kept of all persons employed on a public works construction project for which the Prevailing Wage Rates have been provided. Every Contractor and Sub-Contractor must submit a copy of their weekly payroll records to the Awarding Authority. This is required to be done on a weekly basis. Failure to submit payrolls may result in delayed payment of monies outstanding, until contractor or subcontractor is in compliance with this law. Once collected, the Awarding Authority is required to preserve those records for a period of three years.

Reference Form- To include three current contract references, at least one of which is a government agency that can be contacted during the IFB process. Two of the references must be customers for which the bidder is or has provided services similar to those

outlined in the Scope of Services of the IFB. Include customer name, contact person, his/her title, address and telephone number.

Bid Pricing Form- Signature required

3.8 Submitted Bids

The City of Chelsea shall be under no obligation to return any bids or materials submitted by the bidder in response to this Invitation for Bids. All materials submitted by bidders become the property of the City of Chelsea and will not be returned to the bidder. The City of Chelsea has the right to use any ideas, concepts or configurations that are presented in the bidder's bid whether or not the bid is selected for contract award.

3.9 Clarification of Bid

The City of Chelsea is not required to seek clarification of bids; therefore, the bidder should be as clear as possible in all of its responses to this Invitation for Bids.

3.10 Evaluation and Award of Contract

All pricing must remain constant for the entire term of the contract, as well as any possible extension offered. Bids will be evaluated and awarded based upon the lowest, responsive and eligible bid.

3.11 Rejection of Bidder's Bid

A bidder's bid may be rejected by the City of Chelsea if the bidder's bid:

- Fails to adhere to one or more of the requirements
- Fails to submit its bid to the required address on or before the Invitation for Bid responses due date
- Fails to submit a bid in accordance to the format and instructions specified or to supply the minimum information requested in this Invitation for Bids.
- Fails to meet unconditionally or is unable to demonstrate competence to meet the requirements of this Invitation for Bids.
- Misrepresents its equipment, systems or services or provides demonstrably false information in its response or fails to provide material information.
- Violates the restrictions on contacts with the City of Chelsea employees and representatives
- Refuses, is unable to, or fails to provide clarification requested by the City of Chelsea in a reasonable time frame.

3.12 Invitation for Bids Cancellation

The City of Chelsea retains the right to cancel this Invitation for Bids, or any portion thereof, at any time prior to the execution and approval of a contract. If this Invitation for Bids is cancelled, all responses received to this Invitation for Bids will be rejected. All expenses related to the preparation of responses to this Invitation for Bids remain the responsibility of the bidder.

3.13 No Guarantee of Purchase

The City of Chelsea makes no guarantee that any purchase shall take place from any contract resulting from this Invitation for Bids nor does the City of Chelsea guarantee any minimum quantity of purchases from any contract resulting from this Invitation for Bids. Any estimated or past procurement volumes referenced in this Invitation for Bids are included only for the convenience of the bidders, and not to be relied upon as any indication of future purchases.

The bidder may not place, as a condition for providing the cost levels proposed, any minimum purchase requirements.

3.14 Prime Contractors and Subcontractors

Prior approval of the eligible entity is required for any subcontracted service of the contract. Contractors are responsible for the satisfactory performance and adequate oversight of it subcontractors. Subcontractors are required to meet the same state and federal financial program and reporting requirements and are held to the same reimbursable cost standards as the successful bidder.

The City of Chelsea requires a single point of contact for any contract resulting from this Invitation for Bids. Subcontractors may be used, but the successful bidder, as prime contractors, shall be responsible for meeting all of the terms of any contract resulting from this Invitation for Bids and must accept full responsibility for any subcontractor's performance.

Bidders must provide a list of subcontractors, a description of each subcontractor's responsibility in regards to this contract and signed letters of agreement between the bidder as the prime contractor, and its subcontractor(s) identifying their responsibilities and their relationship to the prime contractor. The prime contractor must notify each individual account (eligible entity) in writing; the name of their subcontractor both initially and when a sub contractor is changed. If a subcontractor has filed for Chapter 11 Bankruptcy of Chapter 7 Bankruptcy, the prime contractor also must notify the City of Chelsea. The notification must be written and must be within one week of the events noted above.

3.15 Written Inquires

Bidders may submit written inquiries concerning any part or attachment of this Invitation for Bids. Written inquiries regarding issues outside of the scope of this Invitation for Bids will not be considered.

All inquiries must be submitted by the required date and time, to the contact listed on the cover page of this Invitation for Bids.

All written inquiries must be submitted via electronic mail (email) only. No other manner of submission will be accepted.

Any change to this submission date and/or time will be made by a notice sent electronically to all bidders. The bidder is responsible for confirming receipt of its written inquiries with Dylan Cook, Chief Procurement Officer, City of Chelsea at dcook@chelseama.gov.

The City of Chelsea will provide written responses via electronic mail (e-mail) to all written inquiries received by the required due date. Responses will not identify the inquiry by bidder.

3.16 Instructions for Submission of IFB Responses

Each Invitation for Bid Response must be sealed, labeled and submitted to the address listed on the cover page of this document.

Paper Submission- The Bidder must submit one (1) original response to the Invitation for Bids marked "ORIGINAL" The Envelope must be clearly marked **"Burke Outdoor Lighting Upgrades"** along with the name and address of the bidder.

3.17 Deadline for Submission

All responses to this Invitation for Bids are due at the address listed on the cover page and no later than the date and time listed in the Procurement Calendar.

End of Section

Section 4 Scope of Services - Burke Outdoor Lighting Upgrades

SECTION 01100 - SUMMARY

PART 1 - GENERAL

1.1 RELATED DOCUMENTS

A. General provisions of the Contract, including General and Supplementary Conditions and other Division 1 Specification Sections, apply to this Section.

B. The latest revision or version of codes and standards referenced within the Contract Specification Section shall be used.

1.2 WORK COVERED BY CONTRACT DOCUMENTS

A. Project Identification: Project consists of replacement of selected light fixtures, light poles and wiring at the location specified.

1. Project Location: Mary C Burke Elementary School Complex, 300 Crescent Avenue, Chelsea Massachusetts, herein after referred to as the "Burke School".

2. Owner: Chelsea Public Schools, 500 Broadway, Chelsea, MA 02150

B. Engineer Identification: The Contract Documents, dated November 27, 2012, were prepared for the Project by Jacobs Engineering Group Inc., 343 Congress Street, Boston, Massachusetts, 02210.

C. Construction Manager: Construction Manager for this Project shall be Project's Constructor. In Divisions 1 through 16 Specifications, the terms "Construction Manager" and "Contractor" are synonymous.

D. Project Coordinator: Mr. Peter Kambour, Director of Facilities Management, Chelsea Public Schools, or his appointee for the Project Coordinator.

1.3 The Work consists of:

A. In general, the work shall consist of replacing selected existing exterior light fixtures and associated components at the Burke School. The work shall include, but not be limited to:

1. Removal and replacement of existing exterior light fixtures.
2. Removal and replacement of existing light fixture poles and pole bases.
3. New lighting circuit wiring as needed.
4. Testing of the lighting system and devices.
5. All ancillary work associated with the removal and replacement of the light fixtures including trenching, backfilling, concrete work and pavement work.

1.4 WORK SEQUENCE AND SCHEDULE

A. The Construction Schedule shall be determined with the successful bidder and the Director of Facilities Management for the Chelsea School Department.

B. Contractor shall submit a schedule for completion of work identifying the following milestones:
   a. Start of Project Construction
   b. Delivery of Submittals
   c. Delivery of major equipment
   d. Completion of new installations
   e. Testing and commissioning
   f. Project Completion/Closeout

C. The construction schedule shall reflect the following milestone dates:
   a. Construction site staging.
   b. Start of demolition and construction.
   c. Project Completion/Closeout.
   d. Project Completion/Closeout will be determined with the successful bidder and the Project Coordinator.

1.5 USE OF PREMISES

A. General: Contractor will have limited use of premises for construction operations during construction period.

B. Specific areas for staging and storage of construction materials will be identified by the Project Coordinator. Access to mechanical rooms will require ramps and planking to be in place in order to protect the rubber roof and door openings.

C. Contractor is advised that school is in session and work will be accomplished during normal school activities. No disruption, interruption, or any other contractor activity, shall adversely affect school operations. Contractor shall provide security for his tools, consumables, and to the area during the period of construction.

1.6 SPECIFICATION FORMATS AND CONVENTIONS

A. Specification Format: The Specifications are organized into Divisions and Sections using the 16-division format and CSI/CSC's "MasterFormat" numbering system.

   1. Section Identification: The Specifications use section numbers and titles to help cross-referencing in the Contract Documents. Sections are in numeric sequence; however, the sequence is incomplete. Consult the table of contents to determine numbers and names of sections in the Contract Documents.

B. Specification Content: The Specifications use certain conventions for the style of language and the intended meaning of certain terms, words, and phrases when used in particular situations. These conventions are as follows:

1. Abbreviated Language: Language used in the Specifications and other Contract Documents is abbreviated. Words and meanings shall be interpreted as appropriate. Words implied, but not stated, shall be inferred as the sense requires. Singular words shall be interpreted as plural, and plural words shall be interpreted as singular where applicable as the context of the Contract Documents indicates.

2. Imperative mood and streamlined language are generally used in the Specifications. Requirements expressed in the imperative mood are to be performed by Contractor. Occasionally, the indicative or subjunctive mood may be used in the Section Text for clarity to describe responsibilities that must be fulfilled indirectly by Contractor or by others when so noted.

    a. The words "shall," "shall be," or "shall comply with," depending on the context, are implied where a colon (:) is used within a sentence or phrase.

PART 2 – PRODUCTS (Not Used)

PART 3 -EXECUTION (Not Used)

END OF SECTION

SECTION 16050 - BASIC ELECTRICAL MATERIALS AND METHODS

PART 1 - GENERAL

1.1 RELATED DOCUMENTS

A. Drawings and general provisions of the Contract, including General and Supplementary Conditions and Division 1 Specification Sections, apply to this Section.

1.2 SUMMARY

A. The Work specified in this Section consists of removing, furnishing and installing basic electrical materials and equipment. Use this Section in conjunction with other Sections of Division 16, Electrical.

1. Insulated Wire and Cable.
2. Grounding
3. Lighting

1.3 SUBMITTALS – Refer to Section 01100, for submittal procedures.

A. Shop Drawings - Show control panels; arrangement and location of conduits stubbed for future equipment, cabinet, pullbox and assigned space. Submit at least 14 days before rough-in work or fabrication to prevent delays in Work. Identify equipment by equipment numbers indicated.

B. Drawings prepared by vendors, thoroughly checked and stamped by Contractor.

C. Evidence of compliance before installation of light fixtures in accordance with NFPA 70.

D. Verified field test reports promptly upon completion of tests.

E. Manufacturer's product data.

F. Certificates

1. Certificates of Compliance for materials specified in Part 2 - Products.

1.4 QUALITY ASSURANCE

A. Provide material qualification data to the Owner.

B. Reference Standards

1. American National Standards Institute (ANSI)

ANSI C80.1	Rigid Steel Conduit - Zinc Coated

2. American Society for Testing and Materials (ASTM)

ASTM A123	Zinc (Hot-Dip Galvanized) Coatings on Iron and Steel Products
ASTM A153	Zinc Coating (Hot-Dip) on Iron and Steel Hardware
ASTM D149	Dielectric Breakdown Voltage and Dielectric Strength of Solid Electrical Insulating Materials at Commercial Power Frequencies
ASTM D570	Water Absorption of Plastics
ASTM D638	Tensile Properties of Plastics
ASTM D695	Compressive Properties of Rigid Plastics
ASTM D790	Flexural Properties of Unreinforced and Reinforced Plastics and Electrical Insulating Materials
ASTM D2240	Rubber Property - Durometer Hardness
ASTM D4325	Test Method for Nonmetallic Semi-Conducting and Electrically Insulating Rubber Tapes
ASTM D4388	Nonmetallic Semi-Conducting and Electrically Insulating Rubber Tapes

3. American Welding Society (AWS)

AWS D1.1	Structural Welding Code - Steel

4. Institute of Electrical and Electronics Engineers (IEEE)

IEEE C37.46-1981	American National Standard Specifications for Power Fuses and Fuse Disconnecting Switches

5. National Electrical Manufacturers Association (NEMA)

NEMA KS 1	Enclosed and Miscellaneous Distribution Equipment Switches (600 Volts Maximum)
NEMA TC 2	Electrical Plastic Tubing (EPT) and Conduit (EPC-40 and EPC-80)
NEMA TC 3	PVC Fittings for Use with Rigid PVC Conduit and Tubing
NEMA WD 1	General Requirements for Wiring Devices

6. National Fire Protection Association (NFPA)

NFPA 70	National Electrical Code

7. Underwriters Laboratories Inc. (UL)

UL 5	Surface Metal Raceways and Fittings
UL 6	Rigid Metal Conduit - Steel
UL 50	Enclosures for Electrical Equipment, non-environmental considerations.
UL 486A-486B	Wire Connectors
UL 498	Attachment Plugs and Receptacles
UL 514A	Metallic Outlet Boxes
UL 514B	Fittings for Conduit and Outlet Boxes
UL 651	Safety Schedule 40 and 80 Rigid PVC Conduit
UL 1479	Fire Tests of Through-Penetration Firestops

C. Conform to the following:

1. 527 CMR Massachusetts Electrical Code
2. Insulated Cable Engineers Association (ICEA).
2. National Electrical Safety Code (NESC).
3. OSHA Standards.
4. International Conference of Building Officials, Uniform Building Code (UBC).

1.5 DELIVERY, STORAGE, AND HANDLING

A. Deliver wires and cables to Worksite in new, unbroken standard coils and reels. Attach tags bearing manufacturer's name, trade name of wire and UL label for 600 V wire and cable. Provide evidence of manufacturing date.

B. Install thread protectors on both ends of conduit before shipping. Package couplings separately.

PART 2 - PRODUCTS

2.1 GENERAL REQUIREMENTS

A. Furnish items of material, design, size and rating required.

B. Material and equipment - Bear UL label and evidence of UL listing where UL standards exist and product listing is available. Comply with NFPA 70.

C. Methods of fabrication, assembly and installation - Optional, unless otherwise indicated.

D. Provide products free from defects impairing performance, durability and appearance; of commercial quality best suited for purpose indicated or specified.

E. Steel conduit and accessories - Hot-dip galvanized after fabrication in accordance with ASTM A123.

2.2 RIGID GALVANIZED STEEL (RGS) CONDUIT AND ACCESSORIES

A. Conduit, Couplings, Elbows, Bends, Sealing Fittings and Nipples - ANSI C80.1 and UL 6, with each length bearing manufacturer's stamp and UL label.

1. Method used to determine thickness of zinc coating - Referee Test included in Appendix to ANSI C80.1.

2. Fittings and Accessories

a. Provide separable watertight hub fittings with gasket, separate nylon insulated throat and case hardened locknut.

b. Bushings - Nylon insulated metallic and grounding type.

c. Conduit straps, clamps and clamp backs - Galvanized malleable iron.

d. Rigid steel conduit - Minimum (3/4") diameter at exposed portions and (1") diameter at embedded portions.

2.3 PVC ELECTRICAL CONDUIT AND FITTINGS

A. Embedded portions of subsystems, unless otherwise indicated - Minimum 1" diameter PVC conduit.

B. Heavy wall, high impact strength, rigid PVC conforming to EPC-40-PVC conduit of NEMA TC 2 and fittings for EPC-40-PVC conduit of NEMA TC 3.

C. UL 651 listed and in accordance with NFPA 70, Article 348 for underground and exposed use.

D. Flammability rated as self-extinguishing, with the following minimum properties:

1. Tensile strength, ASTM D638 at 26°C: 41 MPa.

2. Flexural strength, ASTM D790: 76 MPa.

3. Compressive strength, ASTM D695: 59 MPa.

4. Hardness (Durometer D), ASTM D2240: 77.

5. Water absorption, percent maximum in 24 hours at 22°C, ASTM D570: 0.03.

6. Dielectric strength, volts per mil, ASTM D149: 43 kV/mm.

7. Thermal conductivity: 0.19 W/(m,K).

2.4 CONDUIT EXPANSION FITTINGS

A. Fabricate from material similar to type conduit with which used.

B. Include factory installed packing ring and pressure ring; prevent entrance of moisture.

C. Include grounding ring or grounding conductor for metallic expansion couplings.

2.5 MULTIPLE PIPE HANGERS (TRAPEZE TYPE) - as required.

2.6 INSERTS

A. Channel Inserts

1. Fabricate from cold-formed steel channels 0.11" or thicker; overall size 1.5" by 1.5" or 1.6" by 1.6"; continuous slot .866" wide; lengths as indicated. Galvanize after fabrication in accordance with ASTM A153.

2. For Surface-Mounting

a. Fabricate from channel with 0.4" by 3" slots on 4" centers in base.

b. Galvanize inserts for surface-mounting on concrete surfaces, and for installation in damp or wet areas in accordance with ASTM A153.

c. Use galvanized expansion shield type anchor bolts.

2.7 SURFACE METAL RACEWAYS AND FITTINGS - Conform to UL5 and NFPA 70.

2.8 JUNCTION AND PULL BOXES - Conform to NFPA 70 Article 370.

A. Electrical boxes - Conform to UL 50 and UL 514B.

B. Provide electrical boxes of material finish, type and size indicated and required for location, kind of service, number of wires, and function. Provide mounting holes for No. 10-24 machine screws.

C. Provide boxes complete with accessible covers designed for quick removal and suitable for purpose used; equip boxes, in which or on which no devices or fixtures are to be installed, with flat or raised blank covers as required. Ceiling fixture outlet boxes - Equip with 0.4" boltless fixture studs.

D. Junction and pull boxes less than 0.0016 m^3 in size - Cast metal for exposed installation pressed steel for embedded installation. Boxes over 0.0016m^3 in size -Conform to requirements for cabinets, except use sheet metal boxes with gasketed covers for boxes in tunnels and interface pull boxes at ends of tunnels.

E. Covers - Same thickness as pressed steel boxes; secured in position by No. 10-24 stainless steel machine screws. Arrange covers to be readily and conveniently removed. Cover for 100 mm (4") square box - Provide opening at one side for switch or receptacle; blank at other side.

F. Concealed or embedded receptacle boxes - Pressed steel, 4" by 2" by 2" deep minimum size. Use cast metal boxes for exposed installations.

G. Cast metal boxes - Steel or ferrous alloy, with compatible conduit fittings.

H. Boxes for exposed receptacles - Cast metal, FS and FD Types.

I. Furnish necessary adapter plate for mounting devices on brackets, supports, hangers, fittings, bonding jumpers and other accessories required.

J. Provide neoprene gaskets 0.12" thick for boxes subjected to weather.

K. Grounding - Provide each box with a grounding terminal.

1. Grounding terminal - Green-colored washer-in-head machine screw not smaller than No. 10-32 in a drilled and tapped hole in back of box, or a grounding bushing with green-colored machine screw terminal attached to one conduit.

2. Provide suitable grounding terminals in motor connection boxes.

3. Install grounding jumpers as specified in Section 16450, Grounding.

2.9 CONNECTORS AND INSULATING TAPES

A. Splice and Terminal Connectors

1. Provide termination fittings for use with cable furnished, NEMA standard and UL 486A listed.

2. Termination and splice fittings for 10 AWG and smaller conductors - Screw-on, spring-pressure type copper connectors with nonflammable, self-extinguishing insulation of temperature rating equal to that of cable being connected. Terminals - Provide metal insulation grip on conductor for strain relief.

3. Termination and splice fittings for 8 AWG and larger conductors - Tool-applied compression connectors of material and design compatible with conductors for which used.

4. Terminal connectors for conductors 4/0 AWG and larger - Long-barrel, double compression type, with two NEMA standard bolting holes in pad.

5. Provide heat-shrinkable insulator for compression type connectors and splices inside motor box.

B. Insulating Material for Splices and Terminations

1. Type - Accepted by Contractor's Designer for particular use, location and voltage, 0.75" nominal width.

2. Plastic electrical insulating tape for general use - Pliable at -18°C to 105°C (26 F to 247 F). When tested in accordance with ASTM D4325 and ASTM D4388, meet following:

   a. Thickness: 0.007"

   b. Breaking strength: 2.6 kN/m

   c. Elongation: 200 percent

   d. Dielectric strength: 49 kV/mm

   e. Insulation resistance (direct method of electrolytic corrosion): 10 MΩ

3. Rubber electrical insulating tape for protective over-wrapping - Silicone rubber with silicone pressure-sensitive adhesive. When tested in accordance with ASTM D1000, meet following:

   a. Elongation: 525 percent

   b. Dielectric strength: 875 V

   c. Insulation resistance (indirect method of electrolytic corrosion): 10 MΩ

4. Mark tape packages to indicate shelf-life expiration date.

2.10 WIRING DEVICES

A. Wiring devices include receptacles and special outlets installed in raceway and conduit boxes, complete with cover plates.

B. Receptacles and Plugs:

1. Configuration and requirements for connector and outlet receptacles - UL 498 and NEMA WD 1 for heavy-duty general use type.

2. Receptacle bodies and bases - Fire-resistant nonabsorptive hot-molded phenolic composition material or accepted equivalent with metal plaster ears integral with supporting member.

3. Type - Flush type, unless otherwise indicated.

   a. Wall receptacles - Single or duplex as indicated.

   b. Provide receptacles and plug caps with light colored terminal facilities for neutral connections, amber or brass colored for phase conductor connections and green colored hexagonal machine screws for equipment grounding conductor and connections.

   c. Receptacle contacts including grounding contact - Double grip bronze type with spring steel backup clips to ensure both sides of each male prong of plug will be in firm contact.

   d. Provide receptacles with self-grounding clip or mounting strap screws.

   e. Ground fault circuit interrupter duplex receptacles: 120 V, 60 Hz, 15 A with built-in test, reset buttons, and ground fault tripped indication. Interrupt circuit within 0.033 second on a 5 mΩ earth leakage current. Designed for end of run installation or with provisions for feeding through to protect other outlets on circuit. Maximum circuit capacity 20 A. Furnish receptacles with necessary wire connectors, clips, mounting screws and instructions. In public areas, elevator machine rooms and top and bottom escalator pits, provide ground fault circuit interrupter type duplex receptacles.

D. Cover Plates

1. Provide cover plates for receptacles and special purpose outlets. Conform to UL 514A.

2. Use multigang plates for multigang boxes.

3. Covers

   a. Nonpublic concealed or embedded installations - Stainless steel

   b. Exposed installations - Cast metal, compatible with boxes.

   c. Public areas - Stainless steel, with baked porcelain enamel bronze finish

4. Commercial plates of specified material and finish not available for special-purpose outlets - Commercially available plates suitable for enameling to match adjacent surface.

5. Flush devices - Stainless steel, 0.04" thickness.

2.11 DISCONNECTING DEVICES

A. Safety-Switch Type Disconnecting Devices – Enclosed and conforming to IEEE C37.46-1981

B. Heavy-duty Safety Switches [600 VAC] - Meet NEMA KS 1 requirements.

1. Furnish heavy-duty safety switches of electrical characteristics, ratings and accessories as indicated.

2. Furnish switches with NEMA 3R industrial-duty enclosures, metal nameplates, front cover mounted, containing a permanent record of switch type, catalog number and hp ratings.

3. Furnish handle with visible blades, reinforced fuse clips; nonteasible, positive, quick-make quick-break mechanism, and pad-lockable in OFF and ON positions.

C. Fuses - UL accepted, current-limiting type, 200 000 A interrupting capacity, dual-element, time-delay for motor and circuit protection.

2.12 PULL CORDS - Nylon, minimum 247 lb tensile strength.

2.13 FIRESTOP MATERIAL – UL 1479 Listed. All penetrations through fire-rated wall to be sealed with fire-stopping material.

PART 3 - EXECUTION

3.1 GENERAL

A. Install items in locations indicated, rigid and secure, plumb and level, and in alignment with related and adjoining Work to make complete workable system. Do not weld electrical conduits and enclosures to supports. Bolt, screw or clamp to hold and fasten firmly in place. Installation - Designed for easy removal and future replacement.

B. Furnish anchor bolts and anchorage items as required; field check to ensure proper alignment and location. Provide templates, layout drawings, and supervision at Worksite to ensure correct placement of anchorage items in concrete. Check embedded items for correct location and detail before concrete is placed.

C. Install supporting members, fastenings, framing, hangers, bracing, brackets, straps, bolts and angles as required to set and rigidly connect work.

D. Control erection tolerance requirements; do not impair strength, safety, serviceability or appearance of installations. Determine exact locations of conduit. Route conduit parallel to building lines unless otherwise indicated.

E. Trade size, type and general routing and location of conduits, raceways and boxes - As indicated or specified.

F. Install exposed conduit to avoid conflicts with other work. Install horizontal raceways close to ceiling or ceiling beams, and above water and other piping wherever practicable.

G. Install individual conductors and multiple-conductor sheathed cables in conduits as indicated to complete wiring systems.

H. Install switches, receptacles, special-purpose outlets and cover plates complete in neat manner, in accordance with NFPA 70 and local electrical codes. Plug unused openings in boxes, cabinets and equipment.

3.2 CONDUIT AND FITTINGS

A. Metallic and Nonmetallic Electrical Conduit

1. Install conduit in accordance with NFPA 70, and as indicated. Prevent concrete and other materials from entering and obstructing conduit, outlets, and pull and junction boxes. Do not use conduit smaller than 0.75" for exposed Work and 1" minimum for embedded work.

2. Unless otherwise indicated, make conduit bends in accordance with NFPA 70, with not more than three 90 degrees bends, 270 degrees total. Where more bends are required in a particular run, install pull boxes as required to facilitate pulling conductors.

3. Conduit exposed to different temperatures - Seal to prevent condensation and passage of air from one area to the other.

4. RGS conduits - Electrically and mechanically continuous; connect to ground by bonding to grounding system.

5. Apply conductive compound to threads of threaded rigid conduit joints. Do not use compounds containing lead. Terminate conduit in appropriate boxes and junction points.

6. When field cutting of conduit is required, thread and ream conduit to remove rough edges. Where conduit enters box or other fitting, provide bushing to protect wire from abrasion. Provide insulation type bushings and double locknuts on ends of rigid conduits terminating at steel boxes, cabinets and similar enclosures. Smooth rough surfaces and restore galvanized coating.

7. Support individual horizontal conduits not larger than 1.5" diameter with one-hole conduit straps with back spacers or individual conduit hangers.

8. Conduits installed against concrete surfaces - Space away from surface by clamp backs or other acceptable means.

9. Support individual horizontal conduits larger than 1.5" diameter by individual hangers and forged steel conduit strap for vertical runs.

10. In dry locations, spring steel fasteners, clips or clamps specifically designed for supporting exposed single conduits may be used instead of conduit straps or hangers.

11. Hanger rods used in connection with spring steel fasteners, clips and clamps: 0.5" diameter galvanized steel rods or, if concealed above suspended ceiling, galvanized perforated steel strapping. Do not use wire to support conduit.

12. Support parallel conduits at same elevation on multiple conduit hangers or channel inserts. Secure each conduit to pipe hanger or channel insert member by U-bolt, one-hole strap or other specially designed and accepted fastener suitable for use with pipe hangers or channel inserts.

13. Space supports not over 10' on centers for vertical conduits spanning open areas. Securely anchor conduit at each end; do not interfere with installation and operation of equipment at location.

14. Conduits and raceways above suspended ceilings - Support from floor construction above or from main ceiling support members; use applicable methods as specified.

B. Nonmetallic Electrical Conduit

1. Cap or plug ends of embedded conduit with permanent cap or plug; prevent concrete and other materials from obstructing conduit. Do not use duct tape to temporarily seal conduit before concrete placement.

2. Sandpaper joints in PVC conduit; remove burrs, clean and dry joints, and brush with solvent cement recommended by manufacturer.

3. Support conduit to maintain correct location and spacing during concreting operations; provide suitable plastic supports and spacers for conduit ductbanks.

4. Nonmetallic electrical conduit stubbed up to be connected to metallic conduit - Use embedded metallic coupling flush with floor or wall.

5. Other installation requirements - As specified for metallic electrical conduit.

C. Pull Cords

1. Do not splice pull cords.

2. Leave ample slack length at each end of pull cords.

D. Filling Openings - Where slots, sleeves and other openings are provided in floors and walls for passage of raceways, including bus ducts, fill openings as follows:

1. Use fire-resistive filling material for openings similar to material of floor, wall or ceiling being penetrated; finish to prevent passage of water, smoke and fumes.

2. Where conduits passing through openings are exposed in finished rooms, use filling material that matches, and is flush with, adjoining finished floor, ceiling or wall.

3.3 SURFACE METAL RACEWAYS

A. Securely ground surface metal raceways to outlet boxes or to backplates and fixtures by means of bolts, screws or other acceptable methods and as specified in Section 16450, Grounding.

B. Install surface metal raceways where indicated, in accordance with NFPA 70. Use fittings and accessories designed for raceway.

3.4 OUTLET, JUNCTION AND PULL BOXES

A. Outlet Boxes

1. Unless otherwise indicated, flush-mount outlet boxes with front edges of boxes, or attached tile covers flush with finished wall or ceiling.

2. Mount boxes with long axis of devices vertical unless otherwise indicated.

3. Locate boxes and box knockouts without interfering with reinforcing steel.

4. Unless otherwise specified, provide tile finish on box cover in tile walls and ceilings. Do not install covers until finished tile line is determined for particular location.

5. Mounting height indicated for wall-mounted outlet box - Height from finished floor to horizontal centerline of cover plate.

6. Mount outlet boxes for switches and receptacles located on columns and pilasters to clear any installation of partitions.

B. Junction and Pull Boxes

1. Install covers readily accessible after completion of installation.

2. Do not install boxes above suspended ceilings, except where ceiling is removable type or where definite provisions are made for access to each box.

3.5 WIRING – refer to Specification 16120

3.6 WIRING DEVICES

A. Locate general-purpose duplex receptacles as shown on the Contract Drawings.

B. Rigidly attach receptacles to outlet box with at least two screws.

C. Exterior - Mount receptacles in watertight cast type outlet boxes with threaded hubs or bosses and equip with gasketed cover and captive cap of screw or twist type.

D. Provide equipment permanently connected to exterior receptacles with watertight male plugs to suit. Receptacles - Ground-fault-circuit-interrupter type, as specified.

E. Furnish matching plug with each power receptacle installed in Work as indicated.

END OF SECTION

SECTION 16120 – INSULATED WIRE AND CABLE

PART 1 - GENERAL

1.1 RELATED DOCUMENTS

A. Drawings and general provisions of the Contract, including General and Supplementary Conditions and Division 1 Specification Sections, apply to this Section.

1.2 SUMMARY

A. The Work specified in this Section consists of furnishing and installing wires and cables as specified and as indicated.

1.3 SUBMITTALS – Refer to Section 01100, Submittals, for submittal procedures.

A. Before installation of wire and cable, the following product data for each type and size of wire and cable shall be submitted:

1. Manufacturer of wire and cable.
2. Number and size of strands composing each conductor.
3. Conductor insulation composition and thickness in mils.
4. Average overall diameter of finished wire and cable.
5. Minimum insulation resistance in megohms per meter at 20°C (68F) ambient.
6. Jacket composition and thickness in millimeters.
7. Total number of conductors per cable.
8. Shield materials and thickness.
9. Conductor resistance and reactance in ohms per meter at 20°C (68F) ambient.
10. Conductor ampacity at 20°C (68F) ambient.
11. Bending radius of cable sizes larger than 1/0 AWG diameter.
12. Cable weight per foot.

B. Manufacturer's product data

C. Certificates of Compliance for Materials specified in Part 2 - Products.

1.4 QUALITY

A. Reference Standards

1. American Society for Testing and Materials (ASTM)

ASTM B1	Standard Specification for Hard-Drawn Copper Wire
ASTM B3	Standard Specification for Soft or Annealed Copper Wire
ASTM B8-99	Standard Specification for Concentric-Lay-Stranded Copper Conductors, Hard, Medium-Hard or Soft

2. National Electrical Manufacturers Association (NEMA)

NEMA WC 5	Thermoplastic-Insulated Wire and Cable for the Transmission and Distribution of Electrical Energy
NEMA WC 7	Cross-Linked Thermosetting-Polyethylene-Insulated Wire and Cable for the Transmission and Distribution of Electrical Energy

3. National Fire Protection Association (NFPA)

NFPA 70	National Electrical Code (NEC)

4. Massachusetts Electrical Code
527 CMR

1.5 DELIVERY, STORAGE, AND HANDLING

A. Providing marking on wire and cable in accordance with referenced standard. Label items with UL acceptance.

B. Securely wrap, or package each unit to prevent damage; clearly label packaging.

C. Store wire and cable in secure and dry storage facility.

PART 2 - PRODUCTS

2.1 SINGLE CONDUCTOR CABLE

A. Dry and Damp Locations – NFPA 70 Type XHHW (Cross-Linked Thermosetting-Polyethylene-Insulated).

B. Temperature ratings of cables – Not less than 90°C when used at a dry locations, 75°C at wet locations.

2.2 GROUNDING CONDUCTORS

A. Equipment Grounding Conductors

1. Insulated No. 10 AWG and smaller shall be solid copper per ASTM B3, those No. 8 AWG and larger shall be copper Class B stranded per ASTM B8. Type shall be the same as power circuit conductors. Covering shall be continuous green color.

B. Bonding Conductors

1. No. 8 AWG and smaller shall be solid bare copper per ASTM B1; those No. 6 and larger shall be copper Class B stranded per ASTM B8.

2.3 COLOR CODING OF CONDUCTORS

A. Color code of multiple conductor, 120V (ac) control cables – Conform to NEMA WC 5 or as indicated.

B. Color code power supply cables and branch circuit conductors throughout secondary alternating current wiring system as follows:

CONDUCTOR	208/120 V	480/277 V
A	Black	Brown
B	Red	Orange
C	Blue	Yellow
Neutral	White	White
Ground (Power and Communication)	Green	Green
Ground (Equipment, Structures)	Bare	Bare

C. Branch circuit phase conductors 10 AWG and smaller, neutral and equipment ground conductors - Solid color insulation or solid color coating.

D. Phase conductors having colored tracers - Background color other than white or green.

E. Solid color coatings and tracers - A strongly adherent paint or dye not injurious to the insulation, will not fade, and which will not be obliterated by pulling into a conduit or raceway.

PART 3 - EXECUTION

3.1 Provide wiring complete as indicated. Provide ample slack for motor loops and extensions. In outlet or junction boxes provided for installation of equipment by others, tape ends of wires and install blank covers.

3.2 Do not bend cables to a radii less than twelve (12) times the outer diameters, except where conditions make specified radius impractable and shorter radii are permitted by NFPA 70 and NEMA WC 7, Appendix N or NEMA WC.8 as applicable

3.3 Bundle cable and conductors neatly and securely with nylon bundling straps located in switchboards and disconnect switches

3.4 WIRE PULLING

A. Install wire and cable in conduit as indicated. Do not pull wiring into conduit until conduits and outlets have been thoroughly swabbed. Do not use block and tackle or other mechanical means for pulling conductors smaller than 2 AWG in raceways.

C. Provide suitable installation equipment to prevent cutting and abrasion of conduits and wire during the pulling of feeders. Use lubricant and installation procedure as recommended by cable manufacturer. Pulling tension – Do not exceed manufacturer's recommendations.

D. Use masking or other means to prevent obliteration of cable identifications when solid coating or colored tracers are sued.

E. Pull cables, installed in a single conduit, together.

F. Do not exceed percentage of fill in conduit as specified in NFPA 70.

3.5 IDENTIFICATION

A. Provide non metallic fiberboard or plastic identification tags or pressure-sensitive labels designed for fastening to cables and power circuits in pull boxes, fused disconnect switches and switchboard rooms and at all terminations of cable or wire

B. Stamp or print tags or labels to correspond with markings on Contract Drawings, or mark so that feeder or cable may be readily identified.

C. If suspended type identification tags are provided, attach tags to slip-free plastic cable lacing units or to nylon bundling straps.

3.5 CONTINUITY TESTING – Continuity test wires and cables before termination, splicing or connections to loads. Megger test insulation resistance to ground of non-grounded conductor to minimum 10M. Replace any conductors/cables that fail test.

END OF SECTION

SECTION 16450 - GROUNDING

PART 1 - GENERAL

1.1 DESCRIPTION OF WORK

A. Work Included: This Section specifies furnishing and installing complete system neutral grounding, equipment grounding, and building structural grounding.

1.2 SUBMITTALS

A. As-Built Drawings. Submit prior to final acceptance of the work, drawings showing complete layout of systems installed including physical location of ground rods to which connections were made.

PART 2 - PRODUCTS

2.1 BARE GROUND WIRE

A. Soft drawn copper, Class A or Class B stranded, meeting the requirements of ASTM B8; size in accordance with the NEC except where sizes specified herein or shown on the Contract Drawings are larger than those required by NEC; UL listed, Label A for lightning protection conductors. Grounding cable shall be continuous without joints or splices through its length.

2.2 INSULATED GROUND WIRE

A. Copper, Class B Stranded, 600-Volt, 90 degree C, NEC type XHHW; sized as indicated; and UL listed.

2.3 PRODUCTS USED FOR COPPER THERMIT WELDED CONNECTIONS

A. Use products for copper thermit welded connections which are the products of one manufacturer and are produced for the specific application for which they are used.

B. Use materials and equipment which meet or exceed the applicable requirements of the AAR Manual, Electrical Section, Section 13, Chapter 3, Part 6.

C. Coating Materials for Thermit Welded Connections: Use black, rubber based compound coating materials, which are soft, permanently pliable, moldable, and unbacked, not less than 1/8 inch thick, with properties as follows:

Solids	100 percent
Density	12.0 pounds per gallon minimum

Penetration	90-130 ASTM D5
Water Absorption	0.10 percent maximum ASTM D570
Dielectric Strength	500 volts/mil ASTM D149
Volume Resistivity	2,000 megohms-inches ASTM D257 5,000 megohms-cm ASTM D257
Service Temperature	Minus 40 degrees to 160 degrees F.
Chemical Resistance	Melting point, none; flammability, slow burning (ASTM C653); resists alcohol, water, aqueous hydrochloride and sodium hydroxide; dissolved by carbon tetrachloride, naphtha gasoline, mineral spirits, ketones, and benzene.
Highly cohesive and Adhesive	Adheres strongly to metals and concrete and to itself.

2.4 BOLTED GROUNDING CONNECTORS

A. For solderless type made of high strength electrical bronze with silicon bronze clamping bolts and hardware; designed such that bolts, nuts, lock washers and similar hardware which might nick or otherwise damage the ground wire will not directly contact the ground wire.

2.5 GROUND BUS

A. 1/4 inch by 2 inch copper bus bar mounted as shown on the Contract Drawings; drilled and tapped to receive ground cable connections from the ground rod assembly and ground connections for equipment as required.

2.6 GROUND RODS

A. Medium carbon steel core, copper clad by the molten weld casting process; sizes as shown on the Contract Drawings; UL approved.

PART 3 - EXECUTION

3.1 GENERAL GROUNDING REQUIREMENTS

A. General. Provide station electrical grounding complying with procedures of NEC and as indicated.

B. Equipment Ground Conductors

1. Provide each conduit entering switchgear with equipment ground conductor, colored green.

2. Terminate conductor directly on ground bus for switchgear equipment housing and conduit system; do not connect equipment ground conductor to neutral bus. Additionally, do not use these conductors to carry any line-to-ground loads, such as 277 volt lighting.
3. Provide feeders serving three-phase, 480 volt, or single phase, 480 volt loads with one equipment ground conductor.

C. White Neutral Conductor. Provide each conduit feeding line-to-ground loads, such as 277 volt lighting with both an equipment ground conductor and insulated white neutral conductor.

D. Provide convenience outlets having ground fault circuit breakers, complying with Section 16050 – BASIC MATERIALS AND METHODS FOR ELECTRICAL WORK.

3.2 EQUIPMENT GROUNDING

A. Wiring, Channels, Cable Trays, Metallic Conduit, Rigid Electrical Metallic Tubing, Flexible Conduits, Metallic Boxes, Panelboards, Generator Frames and Transformer Enclosures. Ground to ground bus with copper ground conductors sized as specified in the Construction Specifications.

B. Motors, Lighting Fixtures and Equipment in Part 3 Article above.

1. Accomplish grounding with equipment ground.
2. Provide equipment ground conductor electrically and mechanically continuous from system equipment and neutral ground connection at source of supply to equipment to be grounded.

C. Building Type Conductors

1. Where conductors are installed in raceways, run equipment ground conductor for alternating current systems within raceways with circuit conductors.
2. Provide copper equipment ground conductor minimum one size smaller than phase conductors, except having minimum size of No. 12 and maximum size No. 4/0 AWG.
3. Identify equipment ground conductors with colored green type insulation, except where green insulation is not available on larger sizes, black colored insulation shall be used and suitably identified with green tape at each junction box or device enclosure.

D. Junction Boxes and Other Enclosures Sized Above Five Square Inches. Securely bond equipment ground conductors to enclosures utilizing equipment ground bus or lug.

3.3 CONVENIENCE OUTLETS

A. Ground all convenience outlets in accordance with the NEC.

3.4 THERMIT WELDING CONNECTIONS

A. Connect electrical wires together, to reinforcing steel or soldier piles, as indicated, by thermit welding using the manufacturer's recommended molds and size of charges for application.

B. Prepare the material to be welded and perform thermit welding in accordance with manufacturer's instructions.

C. Test completed thermit welds before coating by striking with two pound hammer. If cracks develop, replace welds at no additional expense to the Authority. When required by the Engineer, test the electrical continuity of bonds.

D. Apply coating so that it extends one inch beyond point of attachment to steel member, overlaps wire coating one inch, and provides insulation thickness equivalent to wire insulation, but not less than 1/8 inch in thickness. Do not apply coating material at ambient temperatures below 20 degrees F or above 125 degrees F. Maintain, by an approved method, curing temperature within above temperature range for at least four hours after application of coating. Protect coating by approved means until embedment.

3.5 ELECTRIC HANDHOLES

A. Ground all metal parts of handholes, including inserts, cable racks, frames, etc with minimum # 6 AWG copper cable.

B. Install ¾" x 10' ground rod at each handhole.

3.6 FIELD QUALITY CONTROL

A. Testing Grounding Systems

1. Ground Resistance Testing
   a. Testing. Verify that resistance between ground and absolute earth for grounding systems does not exceed two ohms without benefit of chemical treatment or other artificial means, unless indicated otherwise in the Construction Specifications.
2. Test Report. Provide test report completely describing ground resistance test procedures and giving test results.

END OF SECTION

SECTION 16500 -LIGHTING

PART 1 - GENERAL

1.1 DESCRIPTION OF WORK

A. Work Included: This Section specifies lighting systems, complete and operable, as indicated, including fixtures, fixture mounting hardware to include brackets and poles, and auxiliary lighting equipment.

1. The equipment and materials required under this Section shall be in accordance with the general description as indicated in Section 16050 – BASIC MATERIALS AND METHODS FOR ELECTRICAL WORK.

2. Lighting levels shall exceed code minimums (0.5 footcandles) for safety and security purposes.

B. Related Work: The equipment and materials required under this Section shall be in accordance with the general description as indicated in Section 16050 – BASIC MATERIALS AND METHODS FOR ELECTRICAL WORK.

C. Coordination and work between the electric company and the contractor will be paid for by the contractor and reimbursed to the contractor through an allowance.

1.2 REFERENCES

A. Comply with the latest published issues of standards, codes, recommendations, and applicable requirements of the following listed organizations :

1. American Welding Society (AWS)

AWS D1.1 Structural Welding Code - Steel

2. American Society for Testing and Materials (ASTM)

ASTM A123 Zinc (Hot-Dip Galvanized) Coatings of Iron and Steel Products

3. Illuminating Engineering Society of North America (IESNA)

RP-22-08 Lighting for Parking Facilities

4. National Electrical Manufacturer's Association (NEMA)

NEMA TC 2 Electrical Plastic Tubing (EPT) and Conduit (EPC-4 and EPC-80)

NEMA TC 2 PVC fittings for Use with Rigid PVC Conduit and Tubing

NEMA WD 1 General Requirements for Wiring Devices

5. National Fire Protection Association (NFPA)

NFPA 70 National Electrical Code (NEC)

6. Underwriter's Laboratories, Inc.

UL 773 Standard for Safety of Plug-In, Locking Type Photo Controls for Use with Area Lighting

UL 1598 Standard for Luminaires

7. Porcelain Enamel Institute

PEI-S-100 Design & Fabrication of Metal of Porcelain Enamel

B. Conform to the following:

1. 527 CMR Massachusetts Electrical Code

2. Insulated Cable Engineers Association (ICEA)

3. National Electrical Safety Code (NESC)

4. OSHA Standards

1.3 SUBMITTALS

A. Submit shop drawings, catalog cuts, descriptive information and photometric data for all lighting fixtures, auxiliary lighting equipment, lighting control equipment, and mounting hardware.

B. Submit manufacturer's installation instructions.

C. If specified, before production is commenced, submit a sample fixture of each style, mounting and lamp arrangement specified. Reports indicating that required tests specified have been successfully completed shall accompany each pre-production sample at the time it is submitted. The sample, if approved, will be retained until completion of the work to confirm quality conformance to the prescribed requirements herein. Provide the sample for operation at 120 volts with six-foot cord and plug.

D. Sample for finishes and colors:

1. Submit samples for acceptance showing nominal color(s) and gloss, and the high and low color and gloss range(s) within which the production materials will be processed.

2. Identify samples as to alloy, pretreatment and color.

3. Hold Point. Do not begin processing of production materials until Engineer's written approval of samples has been obtained.

4. Maintain variation in color of installed materials to the color range established by the acceptance samples.

1.4 QUALITY ASSURANCE

A. Fixtures and auxiliary equipment shall be listed, labeled or certified by UL.

B. Replace fixtures, which fail within 90 days after final acceptance, at no cost to the Owner.

C. Installation Tolerances: Deviation from location, alignment and mounting height: 1/2 inch noncumulative in any unit or continuous runs of fixtures.

PART 2 - PRODUCTS

2.1 LIGHTING FIXTURES

A. General Requirements

1. Provide lighting fixtures, complete and ready for service, of the number, type, material, finish, electrical components and characteristics, and with all necessary hardware and auxiliary equipment indicated.

2. The fixtures shall be clearly marked with manufacturer's name and catalog number, voltage, acceptable lamp type, maximum wattage, ballast type, and self-protection, if any.

3. Fixtures shall be rain-tight and dust-tight for outdoor use, and as indicated. Fixtures must meet IP65 test for water and dust. Provide "Wet Location" label.

4. Minimize the type and variety of fixtures to be provided.

B. Materials

1. Thicknesses, gauges and tempers of products: indicated, and as recommended by the manufacturer for the specific finish, proper forming operations and structural requirements.

2. Lighting sheet for reflector material: Prefinished aluminum, minimum thickness 0.032 inch, architectural Type 1 with Class M1, anodic coating providing 83% reflectively.

3. Polycarbonate lenses and diffusers: Injection molded, crystal clear material, polycarbonate.

C. LED Fixture Finishes

1. Finishes shall be in accordance with the manufacturer's recommendations for the specific application.

2. Commence no finishing operations until fabrication and forming operations have been completed.

3. Aluminum work to be anodized shall be given a preanodic treatment followed by an architectural Class 1, anodic coating as described by The Aluminum Association.

4. Baked enamel: Factory applied to clean surfaces prepared with a chromate conversion coating, and prime coating, as indicated.

5. Porcelain enamel coating: In accordance with the requirements of Porcelain Enamel Institute, PEI-S-101.

6. Galvanized coating: Hot-dip galvanized or hot-zinc conforming to ASTMA 123. Where painting of the galvanized surface is indicated, prepare the surface with vinyl acid wash primer with polyvinyl butyral resin 56 pounds, 80 gallons zinc chromate pigment and phosphoric acid.

7. Stainless Steel: Type 304

D. Electrical Components

1. LEDs

   a. Light engine consists of LEDs mounted to a metal-core circuit board to maximize heat dissipation and promote long life (L87/100,000 hrs at 40 C).

2. Driver

   a. Ensure driver operating characteristics comply with the recommendations of the fixture manufacturer with regard to fixture electrical characteristics. Provide a high power factor constant wattage electronic LED driver featuring a -40 C (-40F) lamp starting capacity and a power factor of at least 90%. Line voltage available shall be 120 volts to 277 volts. The LED driver shall tolerate sustained open circuit and short circuit output conditions without damage.

3. Fixture Wiring

   a. Fixture Wires: Stranded tinned-copper construction, not smaller than No. 16 AWG. Insulation: silicone rubber type SF-2 and 200°C rated. Conductor size, temperature rating, voltage rating and manufacturer clearly marked on the insulation of each conductor.
   b. Use wires between lampholders and associated operating and starting equipment of the same ampacity rating as leads from the ballast. Wiring within the fixtures shall conform to the requirements of the NEC.
   c. No splices shall be permitted within fixtures other than as required to connect lampholders and ballasts.
   d. Fixture Grounding. Unless otherwise specified, the housing of each lighting fixture shall be provided with a separate, factory-installed grounding device. The grounding device is to be used for connecting a separate, green, grounding conductor to the fixture housing.
   e. Wireways and wiring channels shall have rounded edges or bushed holes wherever conductors pass through. Insulated bushings shall be installed at points of entrance and exit of wiring.

E. Fixture Hardware

1. Latch and release mechanism, hinges, pins and other retaining parts of fixtures; screws, bolts or other assembly and mounting parts: manufactured of Type 316 stainless steel. All springs: heavy duty stainless steel. All retaining hardware: self-retaining.

2. Frame light transmitting elements of the fixture to permit replacement of panels in the frames without the use of tools other than screwdriver or pliers. Secure panels in the

frames in a neat, rattle-free manner that will provide proper tolerance for normal expansion and contraction.

3. Form gaskets, sealants and adhesives subjected to high temperature from silicone rubber. Provide other gaskets of neoprene, or as indicated.

4. Fasteners: Provide bolts, nuts, washers, screws, nails, rivets and other fastenings necessary for proper erection or assembly of work. When exposed to the atmosphere, provide fasteners made of 316 stainless steel. Fasteners within the housing shall be made of zinc plated, bright iridite, steel or electrogalvanized, gray. Nuts shall have captive externally footed lockwashers.

5. Aluminum shall not be allowed to come in contact with dissimilar metals. High dielectric insulators shall be used to prevent contact between aluminum and dissimilar metals. The use of gels or other non-solid insulating materials shall not be permitted.

F. Welding

1. Locate welds in assemblies to be anodized to conceal visible discoloration in the heat-affected zone.

2. Where weld metal will be exposed after anodizing, select filler alloys to closely match composition of base metal. Comply with parent metal manufacturer's recommendations for such filler alloys.

G. Fixture Housing: Shall be one-piece die-cast aluminum with integral heat sink fins. A solid barrier wall shall separate the optical and electrical compartments. There shall be a double-thick wall with gussets on the support-arm mounting end. Fixture finish to be black.

H. Fixture Lens, Frame, and Latch: Furnish a one-piece die-cast aluminum lens frame with 1" minimum depth around the gasket flange. Integral hinges with stainless steel pins shall provide no-tool mounting and removal from housing. Single die-cast aluminum cam-latch shall provide positive locking and sealing of the optical chamber by a one piece extruded and vulcanized EDPM gasket. A one piece vacuum formed clear UV stabilized polycarbonate enclosure shall be furnished to maintain the seal in lieu of standard tempered glass lens.

I. Fixture Optics: The optical system shall be IES Full Cutoff and Dark-Sky certified to restrict light trespass, glare and light pollution. Fixture optics shall be of IES distributions as specified on the Contract Drawings.

J. Fixture Luminaire Electrical Assembly: Provide a removable plate which supports the electrical components. The assembly shall be removable by means of stainless steel spring latches or a quick turn fastening device. Quick disconnect plugs shall be incorporated to aid in the removal of the assembly. All electrical components within this assembly must conform to Section 16500, 2.01.D. Electrical Components.

2.2 POLES

A. Light poles. Nominal mounting height shall be 25'. Pole shall be square, straight and made from extruded 6063 alluminum alloy. Square tube shall be uniform in cross-section down length of shaft with no taper. Pole finish to match fixture. Pole shall resist wind loads of 90 mph with a maximum deflection of five percent when fully loaded by their own weight, weight and wind

resistance of luminaires they support, and any externally applied loads. Furnish poles as indicated with handhole with flushcover, luminaire mounting (tenon/bracket), base cover and all mounting hardware including anchor bolts, nuts, washers and baseplate to permit accurate alignment and installation of pole and luminaire as indicated. All wiring splices to be located above ground. As shown on Contract Drawings, light poles adjacent to parking spaces to have a minimum 36 inch raised concrete base for protection.

B. Finishes

1. Pole Mounted Fixture Housing: TGIC Thermoset Polyester Powder-Coat. 3 Mil nominal thickness paint shall be applied over a chromate conversion coating to housing, lens frame, latch and support arm.

2. Lighting Poles & Base Cover: Finish color and type to match fixture.

2.3 FIXTURE MOUNTING HARDWARE

A. General Requirements. Provide the fixtures with brackets, straps, canopies and stems, poles and miscellaneous hardware suitable for the mounting method specified.

B. Secure mounting brackets to housing, quantity and spacing as indicated. When exposed to public view, fabricate and finish hardware in matching material to fixture body. Fabricate internal brackets from sheet steel, zinc coated after fabrication.

C. Tubing used for supporting member shall be seamless drawn with a minimum of 1/16 inch wall thickness of size and length as indicated.

D. Finishes

1. Pole Mounted Fixture Housing: TGIC Thermoset Polyester Powder-Coat. 3 Mil nominal thickness paint shall be applied over a chromate conversion coating to housing, lens frame, latch and support arm.

2. Lighting Poles & Base Cover: Finish color and type to match fixture.

2.4 LIGHTING CONTROL EQUIPMENT

A. General Requirements. Provide lighting control components suitable for the lighting system specified and compatible for interface with other associated control devices. Lighting control components shall be rated for continuous service and operate satisfactorily in every respect while the branch circuit power supply voltage to each system is within a +/- 10% range at 60 hertz. Electrical contacts shall have precious metal surfaces.

B. Photoelectric Sensor

1. Conform to the applicable requirements of UL 773.

2. Operation in temperature range of minus 25°C to plus 40°C.

3. Dusk to dawn operation with adjustments from 0.5 to 10 foot candles with a five-minute time delay to preclude false switching.

4. Weatherproof and tamperproof.

5. Acceptable for operation from a supply voltage range of 105 to 285 volts AC.

6. Rated for a lamp load of 1800 VA

7. Minimum life at rated load: 8000 on-off operations.

8. Provided with three blade, twist lock polarized plug and receptacle.

9. Photoelectric sensors shall be mounted facing a northerly direction.

10. Photoelectric sensors, upon failure, shall default to the "on lighting" position.

PART 3 - EXECUTION

3.1 LIGHTING FIXTURES

A. Install lighting fixtures in accordance with the manufacturer's instructions, complete with lamps, hangers, brackets, poles, fittings, and accessories, ready for operation as indicated. Align, mount and level the lighting fixtures uniformly.

B. Avoid interference with and provide clearance for equipment. Where the indicated locations for the lighting fixtures conflict with the locations for equipment, change the locations for the lighting fixtures by the minimum distances necessary as approved by the Engineer.

C. For pole mounted lighting fixtures, the mounting heights shall provide the clearances between the tops of the fixtures and the finished grades as indicated.

D. Exterior fixtures mounted on block or brick walls shall be supported by anchor devices of the expansive lead type. No power driven anchors will be acceptable.

E. Where aluminum is placed in contact with dissimilar materials, except galvanized steel or zinc, treat contact surfaces as follows:

1. When in contact with dissimilar metals:

   a. Apply a prime coat of zinc chromate primer followed by two coats of aluminum and masonry paint to the aluminum surfaces.
   b. Where aluminum is in contact with dissimilar metal hinges, snaps, or other movable parts, install flexible electrically non-conducting grommets between stainless steel and aluminum at the point of contact.
   c. Where aluminum is in contact with dissimilar metals where there is no movement, paint the dissimilar metal with epoxy paint in accordance with the paint manufacturer's instructions including surface preparation. Three coats shall be applied with min. 24 hour drying time between coats.

2. When in contact with concrete, masonry and plaster, apply to aluminum contact surfaces zinc chromate primer, bituminous paint, aluminum metal and masonry paint or pressure tape.

3. When in contact with wood or other absorptive materials, apply two coats of aluminum house paint to such materials and protect aluminum contact surfaces with bituminous paint.

F. Install pole mounted fixtures in accordance with the manufacturer's recommended installation practices as indicated.

3.2 LIGHT POLES

A. Install light poles in accordance with the manufacturer's recommended installation practices as indicated. For existing foundations to remain, supply pole to match existing foundation bolt pattern.

3.3 CONCRETE BASES

A. Obtain necessary templates and anchor bolts before starting work.

3.4 AUXILIARY LIGHTING EQUIPMENT

A. Install as indicated and in accordance with manufacturer's instructions.

B. Anchor firmly in place.

C. Test and adjust for proper operation in accordance with the manufacturer's instructions.

3.5 FIELD QUALITY CONTROL AND INSPECTION

A. Inspect luminaires, lamps and associated hardware prior to and after installation to confirm that they are of the quality and type as specified herein and as indicated, and are free of defects and damage.

B. Provide luminaires and lighting equipment to the project site complete, with suspension accessories, castings, sockets, holders, reflectors, ballasts, diffusing materials, louvers, frames, recessing boxes, and related items, completely wired and assembled as indicated.

C. Whenever practicable, test lighting systems at the same time that the distribution panelboard or switchboard is tested.

D. Adjust floodlights in accordance with the aiming chart provided by the manufacturer. Make adjustments during darkness to obtain the optimum lighting levels throughout.

END OF SECTION

Bidder Information Form
Burke Outdoor Lighting Upgrades
(To be first page of Bid)

Name of Company:

Address:

Telephone #:

Fax #:

Email Contact:

Is the Company a:

Corporation ____

Partnership ____

Sole Proprietorship____

Publicly Held ____

Privately Held ____

Names and address of the Principals, Owners, Directors, Officers:

_____
_____
_____

How many years has the bidder been in business as a General Contractor under the name in which its representatives propose to execute this Contract?

_____
_____
_____

Supply the name and complete business mailing address of any individuals in bidder's organization to whom all notices shall be sent:

_____
_____
_____

The undersigned states that the full names and addresses of all persons interested in this bid as principals are as follows:

The bidder shall state on the line below, if a corporation, the name of the State in which it is incorporated and the date of such incorporation:

If a partnership or corporations give the name of all partners or all officers of the corporation with the address of each:

The undersigned states that s/he is a citizen of the United States and that all the partners, associates or principals interested herein are citizens of the United States, except:

The undersigned offers the following information relative to the facilities, experience, and financial resources to demonstrate its ability to perform the work and comply with the terms and conditions of this Contract:

FACILITIES/EQUIPMENT: Bidder owns and/or has available for immediate use on the work under this Contract the following equipment:

EXPERIENCE: Bidder has performed the following similar work: (give location, date, and type of work, size or cost, and reference to name and address of client and engineer).

	Location	Date	Type of Work	Size/Cost
1.				

Reference:

2.

Reference:

3.

Reference:

4.

Has the Contractor ever failed to complete any work awarded to it? If so, state when, where, and why,

State any additional related business experience:

Bid Form: Burke Outdoor Lighting Upgrades
To The Awarding Authority:

A. The undersigned proposes to furnish all labor and materials required for the City of Chelsea in Chelsea, Massachusetts in accordance with the Contract Documents for **Burke Outdoor Lighting Upgrades,** for the contract price specified below.

B. This bid includes addenda number(s) _____.

C. The subdivision of the proposed Contract Price is as follows:
(Bidder: insert words and numbers. In cases of conflict between words and numbers, the words shall control).

Total Bid Price (Lump Sum Bid) in Words_____
_____**Dollars and** _____**Cents**
Total Bid Price (Lump Sum Bid) in Figures **$**_____._____

Company Name: _____

Company Address: _____

Telephone Number: _____ Fax Number: _____

Signature: _____

Print Name: _____ Date: _____

In conjunction with the words, and figures submitted above for the requisite bid items, and an integral part of said bid submission, the undersigned certifies that:

The undersigned declares that the only persons or parties interested in his/her bid as principals area as stated; that the bid is made without any collusion with other persons, firms, or corporations; that he/she has carefully examined all the Contract Documents and has informed him/herself fully in regard to all conditions pertaining to the work and based on this information, the undersigned makes this bid. These prices shall cover all expenses incurred in performing the work required under the Contract Documents of which this Bid Form is a part.

The undersigned shall furnish a FIFTY percent (50%) payment bond & performance bond with a surety company acceptable to the City in the forms following this Bid Form.

All bids shall remain open for thirty (30) days, not including Saturdays, Sundays, and legal holidays, after the date of the bid opening.

If a notice of award and three (3) unsigned copies of the Contract (and all other applicable Contract Documents) is delivered to the undersigned within thirty (30) calendar days, not including Saturdays, Sundays, and legal holidays, after the date of receipt of such notification, he/she shall within five (5) days execute and return all copies of the Contract (and all other applicable Contract Documents) to the City. The premiums for all bonds required shall be paid by the Contractor and shall be included in the contract price. The undersigned further agrees that the bid security accompanying this bid shall become the City's property if the bidder fails to execute the Contract as stated above.

Amounts shall be shown in both words and figures, where indicated. In case of discrepancy, the amount shown in words will govern. The above prices shall include all labor, materials, equipment, supervision, transportation, overhead, profit, insurance, and incidentals required to complete the Work.

The undersigned hereby certifies that s/he is able to furnish labor that can work in harmony with all other elements of labor employed or to be employed on the Work.

Furthermore, pursuant to M.G.L., Chapter 62C, Section 49A, I certify under the penalties of perjury that I, to my best knowledge and belief, have filed all state tax returns and paid all state taxes required under the law.

The undersigned under penalties of perjury certifies that this bid is in all respects true, accurate, bonafide, fair, and made without collusion or fraud with any other person. As used in this section, the word "person" shall mean any natural person, joint venture partnership, corporation, or other business or legal entity.

Signed this ____ day_____, 2014.

_____	_____
Social Security Number or Federal Identification Number	Signature of Individual or Corporate Name
	By: _____ Partner of Corporate

STATEMENT OF CORPORATE AUTHORITY

At a duly authorized meeting of the Board of Directors of _____,

held on_____, at which time all voted that _____

of this Company, be and hereby is authorized to execute contracts and bonds in the name and behalf of said Company, and affix its Corporate Seal thereto, and such execution of any contract of obligation in this Company's name on its behalf by such person _____ under seal of the Company, shall be valid and binding upon this Company.

A TRUE COPY,

ATTEST:_____
Clerk

PLACE OF BUSINESS:

_____

_____

DATE OF THIS CONTRACT:

_____

I hereby certify that I am the Clerk of _____

_____and that_____ is

duly elected _____of said Company, and that

the above vote has not been amended or rescinded and remains in

full force and effect as of the date of this contract.

_____
(Clerk's Signature)

(CORPORATE SEAL)

CITY OF CHELSEA

OSHA COMPLIANCE CERTIFICATION

Any person submitting a bid for, signing a contract to work on, the construction, reconstruction, alteration, remodeling or repair of any building or public works project undertaken by a public awarding authority in Massachusetts and estimated to cost more than $10,000 must certify on the bid or contract, under penalties of perjury, as follows:

1. that he is able to furnish labor than can work in harmony with all other elements of labor employed or to be employed at the work

2. All employees to be employed at the worksite will have successfully completed a course in construction safety and health approved by the United States Occupational Safety and Health Administration that is at least 10 hours in duration at the time the employee begins work and who shall furnish documentation of successful completion of said course with the first certified payroll report for each employee; and

3. that all employees to be employed in the work subject to this bid have successfully completed a course in construction safety and health approved by the United States Occupational Safety and Health Administration that is at least 10 hours in duration. (MGL. c. 30, Section 39S (a))

Pursuant to M.G.L. c. 30, Section 39M and M.G.L. c. 149, I certify under penalties of perjury that, to the best of my Knowledge and belief, I am in compliance with the OSHA requirements as stated above.

Dated_____ _____

Name of Company or Corporation

_____

Authorized Official's Signature

BIDDERS/RESPONDENTS MUST SUBMIT THIS FORM FULY COMPLETED

CONTRACT NO._____

CITY OF CHELSEA
CONTRACT FOR SERVICES
over $10,000

This agreement (the "Agreement") is made and entered into by and between the City of Chelsea (hereinafter the CITY), a municipal corporation organized and existing under the laws of the Commonwealth of Massachusetts, and

[NAME]
[ADDRESS]
(hereinafter the CONTRACTOR)

For mutual consideration the Parties hereby agree as follows:

ARTICLE 1. DEFINITION.
This CONTRACT as used herein shall consist of this Agreement, and the "contract documents" which include but are not limited to the following identified items and all documents, and forms submitted therewith, or attached hereby.

- ☐ Attachment A: Scope of Services, and/or other bid package materials
- ☐ Attachment B: Additional Contract Terms and Conditions
- ☐ Attachment C: Certificate of Non-Collusion, Tax Compliance Certification, Statement of Corporate Authority
- ☐ Attachment D: Summaries of Laws Regarding State Ethics - Acknowledgment of Receipt
- ☐ Addenda through #

ARTICLE II. AMOUNT AND TERM.
Pursuant to the terms and conditions stated in the Contract, this CITY agrees to pay an amount not to exceed $_____, and the Contractor agrees to perform the services detailed in the Contract. The Contract shall commence on or about _____ (the "Commencing Date") unless earlier terminated pursuant to Article IV, Termination and shall terminate no later than _____, unless a written amendment to renew or extend this contract is executed in accordance with the provisions of this CONTRACT.

ARTICLE III. PERFORMANCE.
The Contractor agrees to provide all goods and/or services set forth in the Invitation for Bid/Request for Proposal Documents, Scope of Service, the Contractor's proposal for "_____", and/or as outlined in ATTACHMENT A - SCOPE OF SERVICES.

ARTICLE IV. TERMINATION.
i) Without Cause. The CITY may terminate this CONTRACT on sixty (60) calendar days notice, or may suspend this CONTRACT for up to sixty (60) calendar days upon receipt of notice, when in the best interests of the CITY, by providing notice to the CONTRACTOR, which shall be in writing and shall be deemed delivered and received when given in person to the CONTRACTOR, or when received by fax, express mail, certified mail return receipt requested,

regular mail postage prepaid or delivered by any other appropriate method evidencing actual receipt by the CONTRACTOR.

ii) For Cause. If the CONTRACTOR is determined by the CITY to be in default of any term or condition of CONTRACT, the CITY may terminate this contract on thirty (30) days notice by providing notice to the CONTRACTOR, which shall be in writing and shall be deemed delivered and received when given in person to the CONTRACTOR, or when received by fax, express mail, certified mail return receipt requested, regular mail postage prepaid or delivered by any other appropriate method evidencing actual receipt by the CONTRACTOR. If the CITY is determined by the CONTRACTOR to be in default of any term or condition of this CONTRACT the CONTRACTOR may terminate this contract on thirty (30) days notice by providing notice to the CITY, which shall be in writing and shall be deemed delivered and received when given in person to the CITY, or when received by fax, express mail, certified mail return receipt requested, regular mail postage prepaid or delivered by any other appropriate method evidencing actual receipt by the CITY.

iii) Default. Events of default under this CONTRACT shall include, but are not limited to the following: a) any material misrepresentation made by the CONTRACTOR to the CITY, b) any failure to perform any of its obligations under this CONTRACT including, but not limited to the following: (i) failure to commence performance of this CONTRACT at the time specified in this CONTRACT due to a reason or circumstance within the CONTRACTOR'S reasonable control, (ii) failure to perform this CONTRACT with sufficient personnel and equipment or with sufficient material to ensure the completion of this CONTRACT within the specified time due to a reason or circumstance within the CONTRACTOR'S reasonable control, (iii) failure to perform this CONTRACT in a manner reasonably satisfactory to the CITY, (iv) failure to promptly re-perform with reasonable time the services that were rejected by the CITY as unsatisfactory, or erroneous, (v) discontinuance of the services for reasons not beyond the CONTRACTOR'S reasonable control, (vi) failure to comply with a material term of this CONTRACT, including, but not limited to, the provision of insurance or failure to comply with nondiscrimination provisions, and (vii) any other acts specifically and expressly stated in this CONTRACT as constituting a basis for termination of this CONTRACT, and (viii) failure to comply with any and all requirements of state law, and/or regulations, and City ordinances, and/or regulations.

ARTICLE V. REMEDIES OF THE CITY.

The City hereby retains all remedies in law and equity, including but not limited to, the right to deduct the cost of any substitute contract or performance for expenses, losses, and all damages and the right to withhold from payment, any amounts for expenses, losses, and damages from sums due, or which become due.

ARTICLE VI. REMEDIES OF THE CONTRACTOR.

If the Contractor, due to any act or omission for which the City is legally responsible, sustains damages, other than loss, non-conformance, or non performance, the Contractor may request, within 30 days of the alleged act or omission from the City, a sum equal to the amount of such damages sustained by the Contractor, which amount may be determined by the City in writing, at the City 's sole discretion, provided that the Contractor has provided to all signatories of this Agreement, a detailed, written statement of such damages and cause thereof within said 30 day period.

ARTICLE VII. ASSIGNABILITY.

The CONTRACTOR shall not assign, subcontract or in any way transfer any interest, rights or obligations in this CONTRACT without the prior written consent of the City Manager. In the

event of such assignment the CITY reserves the right to deal with any assignee subcontractor or transferee directly and the CONTRACTOR agrees to remain bound by all terms and conditions of this CONTRACT in accordance with its original tenor and in no way shall the CONTRACTOR be relieved of its responsibilities and obligations under this CONTRACT. The provisions of this CONTRACT shall be binding upon, and shall inure to the benefit of, the successors and assigns of the CONTRACTOR and any public body or bodies succeeding the interests of the CITY.

ARTICLE VIII. INDEMNIFICATION.

The CONTRACTOR shall assume the defense, indemnify and hold harmless the CITY, the CITY'S agents and employees, from and against all losses and all claims, demands, payments, suits, actions, recoveries and judgments of every nature and description brought or recovered against them by reason of acts, in actions, omissions, negligence, reckless or intentional misconduct of the said CONTRACTOR, its agent(s), officers, employees, or subcontractors; in the execution of the work or in guarding the same. Unless otherwise provided by law, the CITY may elect, at its sole discretion, to indemnify the CONTRACTOR for claims arising in tort if it is determined that the CONTRACTOR performed its obligations under this CONTRACT pursuant to the direct supervision and control of the CITY or its designated agent(s).

ARTICLE IX. WORKER'S COMPENSATION AND OTHER INSURANCE.

The CONTRACTOR shall provide insurance for the payment of compensation and the furnishing of other benefits under Chapter 152 of the General Laws of Massachusetts (The Worker's Compensation Act) to all employees of the CONTRACTOR who are subject to the provisions of Chapter 152 of the General Laws of Massachusetts.

Failure to provide and continue in force such insurance during the period of this contract shall be deemed a material breach of this contract, shall operate as an immediate termination thereof, and CONTRACTOR shall indemnify the CITY for all losses, claims, and actions resulting from the failure to provide the insurance required by this Article.

The Contractor shall furnish to the CITY evidence of such insurance prior to the execution of this contract and before the same shall be binding on the parties thereto, except if specifically waived in Attachment B.

Prior to commencement of any work and until completion of its work under this CONTRACT, the CONTRACTOR shall maintain the following insurance coverage, at its cost, from insurance acceptable to the CITY, giving evidence of such coverage to the CITY prior to execution of this CONTRACT, a copy of such insurance coverage to be attached herewith:

1. Comprehensive Automobile Liability Insurance covering the use of all owned, non-owned and hired automobiles in connection with its operations with a combined single limit of $1,000,000. The comprehensive Automobile Liability insurance may be provided through primary and excess or umbrella insurance policies.

2. CONTRACTOR'S Equipment Coverage (or a certification of self-insurance satisfactory to the CITY) must be provided on an "All Risks" basis, covering physical damage to all tools and equipment, including automotive equipment owned, rented, or used by the CONTRACTOR.

3. Commercial General Liability Insurance coverage which may be provided through primary and excess or umbrella liability policies for limits of $1,000,000 general aggregate, and $500,000 per occurrence.

All required insurance must be endorsed to name the CITY as Additional Insured. All required insurance shall be endorsed to waive the insurer's rights of subrogation against the City. All policies and certificates of insurance must contain language that the insurance shall not be canceled, materially changed or non-renewed without at least thirty (30) days advance written notice to the CITY. The CONTRACTOR under this CONTRACT shall not allow its subcontractors to begin work until similar insurance has been so obtained and certificates of insurance approved by the CONTRACTOR.

ARTICLE X. CORPORATE CONTRACTOR.

If CONTRACTOR is a corporation, CONTRACTOR shall endorse the Certificate of Corporate Authority for the CONTRACTORS' signatory (Exhibit C), or shall otherwise provide a form similar in nature and substance acceptable to the CITY at the City's sole discretion.

If CONTRACTOR is a non-profit corporation, CONTRACTOR shall provide satisfactory proof of present status as a non-profit corporation. Such proof shall be in the form of a certification from the Massachusetts Secretary of State's office and/or from the Internal Revenue Service and shall provide the Federal Tax Identification Number of the non-profit corporation. This CONTRACT shall not be enforceable against the CITY unless and until the CONTRACTOR complies with this Article. Failure to inform the CITY in writing of revocation, or other loss of non-profit status shall be deemed a material breach of this contract and operate as an immediate termination thereof.

ARTICLE XI. SUBJECT TO APPROPRIATION.

The obligations of the CITY under this CONTRACT shall be subject to appropriation. In the absence of appropriation this CONTRACT shall be immediately terminated without liability for damages, penalties, or other charges.

In the event any portion of this Agreement is to be funded with alternate funding including but not limited to state, local, federal or private grant funding. In the requisite circumstances, the obligations of the CITY under this CONTRACT shall be subject to the formal award of such state, local, federal or private grant.

ARTICLE XII. DOCUMENTS, MATERIALS, ETC.

Any materials, reports, information, data, etc. given to or prepared or assembled by the CONTRACTOR under this CONTRACT are to be kept confidential and shall not be made available to any individual or organization by the CONTRACTOR (except agents, servants, or employees of the CONTRACTOR) without the prior written approval of the CITY. The CONTRATOR understands that he/she/it may acquire or have access to "personal data" otherwise kept by the CITY. The CONTRACTOR shall comply with the provisions Chapter 66A of the General Laws of Massachusetts as it relates to public documents, and all other state and federal laws and regulations relating to confidentiality, security, privacy and use of confidential data.

Any materials produced in whole or in part under this CONTRACT shall not be subject to copyright, except by the CITY, in the United States or any other country. The CITY shall have unrestricted authority to, without payment of any royalty, commission, or additional fee of any type or nature, publicly disclose, reproduce, distribute and otherwise use, and authorize other to use, in whole or in part, any reports, data or other materials prepared under this CONTRACT.

All data, reports, programs, software, equipment, furnishings, and any other documentation or product paid for by the CITY shall vest in the CITY at the termination of this CONTRACT. The CONTRACTOR shall at all times, during or after termination of this CONTRACT, obtain the prior written approval of the CITY before making any statement bearing on the work performed or data collected under this CONTRACT to the press or issues any material for publication through any medium.

ARTICLE XIII. AUDIT, INSPECTION, RECORDKEEPING.

At any time during normal business hours, and as often as the CITY may deem it reasonably necessary, there shall be made available in the office of the CONTRACTOR for the purpose of audit, examination, and/or to make excerpts or transcripts, all records, contracts, invoices, materials, payrolls, records of personnel, conditions of employment and other data relating to all matters covered by this agreement.

Further the CONTRACTOR agrees to make its work papers, records and other evidence of audit available to the CITY for a period of three years after final payment under his CONTRACT. The CITY shall be entitled to reproduce any or all such documents at its own expense, for which provision shall be made at such time.

ARTICLE XIV. WEEKLY PAYROLL RECORDS REPORT.

In accordance with Massachusetts General Law c. 149, s. 27B, a true and accurate record must be kept of all individuals employed on a public works construction project for which prevailing wage rates are applicable.

In addition, every contractor and subcontractor is required to submit, on a weekly basis, a copy of their weekly payroll records to the awarding authority. Once collected, the awarding authority is also required to preserve those records for three years.

ARTICLE XV. CONFLICT OF INTEREST.

i) CITY. No officer, member or employee of the CITY and no members of its governing body who exercise any function or responsibility in review or approval of the undertaking or carrying out of this CONTRACT shall participate in any decision relating to the CONTRACT which affects his/her personal interests or the interest of any corporation, partnership, or association in which he/she has a direct or indirect pecuniary interest. None of the services to be provided by the CONTRACTOR shall be used for any partisan political activity or further the election or defeat of any candidate for political office in the CITY. Compliance with this section shall be material to the CONTRACT.

ii) CONTRACTOR. CONTRACTOR agrees that his/her/its agents, servants, and employees have neither presently nor during the period of this CONTRACT any interest direct or indirect which would impair, detract, or conflict in any manner or degree with the performance of services required under this CONTRACT. The CONTRACTOR, his/her/its agents, servants and employees further stipulate that in the performance of this CONTRACT, no person having any such interest shall be employed. Conflicts of Interest include but are not limited to (a) immediate family relationships with officials of the CITY, (b) instances where the CONTRACTOR, his/her/its agents, servants or employees during the period of this CONTRACT was connected as an officer, employee or member of the governing body of the CITY, and (c) instances where the CONTRACTOR has an interest in any CITY department, its agents, servants or employees or parcels of land within the CITY. Compliance with this section shall be material to the CONTRACT. The CONTRACTOR, his/her/its agents, servants and employees must disclose any and all such interests in writing to the CITY.

ARTICLE XVI. PAYMENT.
The City agrees to make all reasonable efforts to pay to the CONTRACTOR the sum set forth any invoice which has been approved by the City Manager or his authorized designee within thirty (30) days of receipt of such invoice at the Office of the City Auditor. Each invoice shall detail the work completed.

Subject to pending statutory appeal rights, the City hereby reserves the right and the CONTRACTOR hereby agrees that the City may deduct from the sum(s) otherwise payable under this CONTRACT any outstanding taxes, fines, fees and/or other municipal charges prior to disbursement to the CONTRACTOR.

ARTICLE XVII. CONFLICT.
In the event there is a conflict between these Articles and Attachment A, Attachment A shall supersede these Articles.

ARTICLE XVIII. WAIVER AND AMENDMENT.
The provisions contained in this CONTRACT may be modified only by the express written consent of the Parties. Any amendments, must be made only by written amendment executed by all signatories to the original agreement, prior to the effective date of the amendment.

The failure of any party to insist on the strict performance of any term, covenant or condition to this CONTRACT, at anytime, or in any one or more instances, or its failure to take advantage of any of its rights, or any course of conduct or dealing, shall not be construed as a waiver or a relinquishment of any such rights or conditions at any future time and shall, in no way act, as a wavier by any party of a breach of another party or have any affect on the continuance of or the full force and affect of any or all of the provisions of this Contract. The waiver of any provisions must be in writing and executed by all signatories to this Agreement prior to the force and effect of any such waiver.

Forbearance or indulgence in any form or manner by a party shall not be construed as a waiver, nor in any manner limit the legal or equitable remedies available to that party. No waiver by either party of any default or breach shall constitute a waiver of any subsequent default or breach of a similar or different matter.

ARTICLE XIX. CERTIFICATION.
IN WITNESS WHEREOF, THE CONTRACTOR CERTIFIES, UNDER THE PAINS AND PENALTIES OF PERJURY, THAT THE CONTRACTOR IS IN COMPLIANCE WITH EACH OF THE FOLLOWING:

a. TAXES. PURSUANT to M.G.L. c. 62C, s. 49A, the CONTRACTOR has filed all state tax returns and complied with all laws of the Commonwealth relating to taxes.

b. DEBARMENT. The CONTRACTOR is not currently debarred or suspended by the Commonwealth of Massachusetts, or any of its entities or subdivisions.

c. AMERICANS WITH DISABILITIES ACT. The CONTRACTOR is aware of the Americans with Disabilities Act which prohibits discrimination based upon disability and shall meet any relevant standards, and/or conditions set out in the bid/proposal documents, bid/proposal specifications, and/or ATTACHMENT A - SCOPE OF SERVICES.

ARTICLE XX. FORUM AND CHOICE OF LAW

This CONTRACT and any performance herein shall be governed by and be construed in accordance with the laws of Commonwealth of Massachusetts, exclusive of its conflicts of law provisions. Any and all proceedings or actions relating to subject matter herein shall be brought and maintained in the courts of the Commonwealth of Massachusetts or the federal district court sitting in the Commonwealth of Massachusetts, which shall have exclusive jurisdiction thereof. Each of the Parties hereto irrevocably consents to and waives any objection to the exercise of personal jurisdiction by the state and federal courts of the Commonwealth of Massachusetts. This paragraph shall not be construed to limit any other legal rights of the parties.

ARTICLE XXI. TAXES

CONTRACTOR shall be solely responsible for the payment of any taxes, levies, betterments or assessments, fees or charges, whether in existence on the date hereof or becoming applicable pursuant to this Contract, which may be assessed against the CONTRACTOR or the CITY which are directly attributable to CONTRACTOR'S activities under this CONTRACT (the "Taxes"). CONTRACTOR shall pay all Taxes directly to the taxing authority before delinquency and before any fine, interest or penalty shall become due or be imposed by operation of law for their nonpayment.

ARTICLE XXII. NOTICES

All notices, demands, requests, consents, approvals and other instruments required or permitted to be given pursuant to the terms hereof (hereinafter "Notice"), shall be in writing and shall be deemed to have been properly given when delivered in hand or deposited in registered or certified United States mail, postage prepaid, return receipt requested, addressed, as described herein or when delivered by messenger or overnight mail service to the correct addressee. Unless otherwise specified, Notice shall be deemed received when actually received or when the proffered Notice has been refused by the Addressee. The signature of an employee, servant or agent of the Addressee shall be determinative on the issue of actual receipt.

All notices shall be sent to the persons and addresses listed below. CONTRACTOR and the CITY shall, at any time and from time to time, have the right to specify as their proper addresses for purposes of this CONTRACT any other address or addresses giving fifteen (15) days' written notice thereof to the other party.

All Notices shall be forwarded to:

FOR THE CITY
Jay Ash, City Manager
500 Broadway
City Hall
Chelsea, MA 02150

With a Copy to:
Cheryl Anne Watson
City Solicitor
Law Department, Room 307
500 Broadway
Chelsea, MA 02150

FOR THE CONTRACTOR:
[NAME]
[ADDRESS]

ARTICLE XXIII. CONSIDERATION
The Parties mutually agree to enter into this CONTRACT for good and valuable consideration.

ARTICLE XXIV. REPRESENTATIONS AND WARRANTIES OF THE CONTRACTOR
The CONTRACTOR represents and warrants (i) the CONTRACTOR has all requisite corporate power and authority to enter into this CONTRACT and to perform the obligations of the CONTRACTOR; (ii) that this CONTRACT has been duly and validly authorized, executed and delivered by the CONTRACTOR; (iii) the execution and delivery of this CONTRACT does not violate or conflict with any other agreement, license or obligation; (iv) the CONTRACTOR is duly organized, legal and validly existing and in good standing in the Commonwealth of Massachusetts; (v) that the CONTRACTOR is duly qualified and authorized to do business in the Commonwealth of Massachusetts; (vi) the CONTRACTOR is in compliance and is current with any payments under all federal, state and local tax laws; (vii) the CONTRACTOR will obtain any and all permits which may be necessary to perform the obligations of this CONTRACT; (viii) the CONTRACTOR will timely perform its obligations required by this CONTRACT.

ARTICLE XXV. THIRD PARTY BENEFICIARIES
This CONTRACT shall not be construed to create any third party beneficiary rights in favor of any other parties or any right or privilege for the benefit of any other parties.

ARTICLE XXVI. ENTIRE CONTRACT
This CONTRACT constitutes the entire Agreement of the parties hereto with respect to the subject matter hereof, and no representations, inducements, promises, or agreements, oral or otherwise, between the parties hereto with respect to the subject matter hereof not embodied herein shall be of any force or effect.

ARTICLE XXVII. LIABILITY OF MUNICIPALITY
The CITY shall not be liable to CONTRACTOR for any loss of business or any indirect, incidental, special, consequential or exemplary damages or lost profits unless expressly specified herein.

ARTICLE XXVIII. HEADINGS
Heading used in this Agreement are for convenience of reference only and shall not be construed as altering the meaning of this CONTRACT or any of its provisions.

ARTICLE XXIX. DAYS
Any reference to "days" in this CONTRACT, shall be deemed to mean business days (Monday through Friday, excluding generally recognized holidays) except where specific reference is made to calendar days.

ARTICLE XXX. SURVIVAL
The parties agree that the provisions of ARTICLE II – AMOUNT AND TERM; ARTICLE III – PERFORMANCE; ARTICLE V- REMEDIES OF THE CITY; ARTICLE VI- REMEDIES OF THE CONTRACTOR. ARTICLE VII – ASSIGNABILITY; ARTICLE VIII – INDEMNIFICATION; ARTICLE IX- WORKER'S COMPENSATION AND OTHER INSURANCE; ARTICLE XI-SUBJECT TO APPROPRIATION; ARTICLE XII – DOCUMENTS, MATERIALS, ETC; ARTICLE XIII – AUDIT, INSPECTION, RECORDKEEPING; ARTICLE XIV- WEEKLY PAYROLL RECORDS REPORT; ARTICLE XVI – PAYMENT; ARTICLE XVIII – WAIVER AND AMENDMENT; ARTICLE XIX –

CERTIFICATION; ARTICLE XX- FORUM AND CHOICE OF LAW; ARTICLE XXI – TAXES; ARTICLE XXIV- REPRESENTATIONS AND WARRANTIES OF THE CONTRACTOR; ARTICLE XXVII- LIABILITY OF THE MUNICIPALITY; ARTICLE XXX – SURVIVAL; and ARTICLE XXXI - SEVERABILITY shall survive the expiration or any earlier termination of this CONTRACT.

ARTICLE XXXI. SEVERABILITY

If any provision of this CONTRACT is held to be illegal, invalid or unenforceable, the remaining terms shall not be affected and shall remain in full force and effect. The Agreement shall be interpreted as if the illegal, invalid or unenforceable provision had not been included in it and the invalid or unenforceable provision shall be stricken and shall be replaced by a mutually acceptable provision which being valid and enforceable comes closest to the intention of the parties with respect to the invalid or unenforceable provision.

ARTICLE XXXII. ADVICE AND COUNSEL

The CONTRACTOR hereby acknowledges and agrees that CONTRACTOR has read this Agreement in its entirety and that CONTRACTOR has had the opportunity to consult legal and financial advisors of their choosing regarding the execution, delivery and performance of their obligations, hereunder.

ARTICLE XXXIII. COUNTERPARTS

This CONTRACT may be executed in counterpart.

THE REMAINDER OF THIS PAGE LEFT INTENTIONALLY BLANK

IN WITNESS WHEREOF the parties have hereto and to three other identical instruments set forth their hands the day and year first above written.

THE CONTRACTOR

_____
Company Name

_____
Status (Corporation/Non-corporate)

_____
Signature & Title

_____
Please Print Name & Title

_____
Date

_____
Taxpayer Identification Number

Approved as to Contract Manager:

_____
Department Head Name
Department Name
City of Chelsea

CITY MANAGER

_____
Jay Ash

_____
Dylan Cook
Chief Procurement Officer

APPROVED AS TO FORM:

_____
Cheryl Watson Fisher
City Solicitor

I CERTIFY THAT FUNDS HAVE BEEN ENCUMBERED IN THE AMOUNT OF $_____ FOR THIS CONTRACT
Appropriation Number:
_____

_____
Edward M. Dunn
City Auditor

ATTACHMENT A

SCOPE OF SERVICES

INSTRUCTIONS FOR DEPARTMENT AND CONTRACTOR: Please attach for reference purposes a copy of all bid/proposal documents, including but not limited to (i) invitations/instructions for bidders (ii) invitation/instructions for proposers, (iii) general and specific conditions, and please provide a detailed description of all types of goods and/or services that will be provided pursuant to this CONTRACT, not otherwise provided in any bid/proposal instructions, specifications, conditions or other documents.

ATTACHMENT B

ADDITIONAL CONTRACT TERMS AND CONDITIONS

INSTRUCTIONS FOR DEPARTMENTS: Please specify any additions or modifications to the terms and conditions (not to conflict with the public procurement laws or City ordinances or regulations:

ATTACHMENT C

CERTIFICATE OF NON-COLLUSION

TAX COMPLIANCE CERTIFICATION

STATEMENT OF CORPORATE AUTHORITY

CERTIFICATE OF NON-COLLUSION
MANDATORY

The undersigned certifies under penalties of perjury that this bid or proposal has been made and submitted in good faith and without collusion or fraud with any other person. As used in this certification, the word "person" shall mean any natural person, business, partnership, corporation, union, committee, club, or other organization, entity, or group of individuals.

Dated:_____

_____
Name of Company or Corporation

_____
Authorized Official's Signature

BIDDERS/RESPONDENTS MUST SUBMIT THIS FORM FULLY COMPLETED.

TAX COMPLIANCE CERTIFICATION

Pursuant to M.G.L. c. 62C, Section 49A, I certify under penalties of perjury that I, to my best knowledge and belief, have filed all Massachusetts tax returns and paid all Massachusetts taxes required under law, as well as paid all contributions and payments in lieu of contributions pursuant to M.G.L., c. 151A, Section 19A(b).

I further certify that I have complied with all federal, state and local laws relating to taxes, including but not limited to the withholding and reporting of any income taxes for employees and contractors, and the withholding and remittance of child support.

_____
Signature

_____
Social Security or Federal ID No.

_____
Date

BIDDERS/RESPONDENTS MUST SUBMIT THIS FORM FULLY COMPLETED.

STATEMENT OF CORPORATE AUTHORITY

At a duly authorized meeting of the Board of Directors of _____

held on _____at which time all voted that_____

of this Company, be and hereby is authorized to execute contracts and bonds in the name and on behalf of said Company, and affix its Corporate seal thereto, and such execution of any contract

of obligation in this Company's name on its behalf by such person_____ under seal of the Company, shall be valid and binding upon this Company.

A TRUE COPY,
ATTEST:

_____

PLACE OF BUSINESS:

_____

_____

DATE OF THIS CONTRACT:

_____

I hereby certify that I am Clerk of _____ and that

_____is duly elected _____

of said Company, and that the above vote has not been amended or rescinded and remains in full force and effect as of the date of this contract.

_____
(Clerk's Signature)

(CORPORATE SEAL)

ATTACHMENT D

City of Chelsea
Conflict of Interest Law
Compliance Statement and Requirements for Vendors

On July 1, 2009, the Legislature enacted Chapter 28 of the Acts of 2009 which made changes to Mass. General Laws c. 268A and c. 268B, the Massachusetts' Conflict of Interest Law. On November 9, 2009, the Chelsea City Council designated the Chelsea City Solicitor as the Municipal Liaison to the State Ethics Commission and responsible for the facilitation of Chelsea's obligation to comply with the changes in the law.

The City has a requirement for compliance, which is to make sure that all municipal elected officials, board and commission members, and employees **including vendors** are provided copies of the Summaries of the Ethics Laws.

Enclosed is a packet that should be copied and provide to each one of your employees who are assigned to work in Chelsea; including yourself. At the end of the summary is an acknowledgement of receipt of the summary. The acknowledgments must be submitted along with any purchase order or contract with the City of Chelsea. All documents pursuant to this new law will be kept on file in the City Clerk's Office

The Procurement Officer will contact you directly, if there is a determination that you or your staff should undergo the Conflict of Interest Online Training Program.

If you have any questions, feel free to contact the Chelsea City Solicitor at 617-466-4150 as soon as possible.

Summary of the Conflict of Interest Law for Municipal Employees

---

This summary of the conflict of interest law, General Laws chapter 268A, is intended to help municipal employees understand how that law applies to them. This summary is not a substitute for legal advice, nor does it mention every aspect of the law that may apply in a particular situation. Municipal employees can obtain free confidential advice about the conflict of interest law from the Commission's Legal Division at our website, phone number, and address above. Municipal counsel may also provide advice.

The conflict of interest law seeks to prevent conflicts between private interests and public duties, foster integrity in public service, and promote the public's trust and confidence in that service by placing restrictions on what municipal employees may do on the job, after hours, and after leaving public service, as described below. The sections referenced below are sections of G.L. c. 268A.

When the Commission determines that the conflict of interest law has been violated, it can impose a civil penalty of up to $10,000 ($25,000 for bribery cases) for each violation. In addition, the Commission can order the violator to repay any economic advantage he gained by the violation, and to make restitution to injured third parties. Violations of the conflict of interest law can also be prosecuted criminally.

I. Are you a municipal employee for conflict of interest law purposes?

You do not have to be a full-time, paid municipal employee to be considered a municipal employee for conflict of interest purposes. Anyone performing services for a city or town or holding a municipal position, whether paid or unpaid, including full- and part-time municipal employees, elected officials, volunteers, and consultants, is a municipal employee under the conflict of interest law. An employee of a private firm can also be a municipal employee, if the private firm has a contract with the city or town and the employee is a "key employee" under the contract, meaning the town has specifically contracted for her services. The law also covers private parties who engage in impermissible dealings with municipal employees, such as offering bribes or illegal gifts.

II. On-the-job restrictions.

(a) Bribes. Asking for and taking bribes is prohibited. (See Section 2)

A bribe is anything of value corruptly received by a municipal employee in exchange for the employee being influenced in his official actions. Giving, offering, receiving, or asking for a bribe is illegal.

Bribes are more serious than illegal gifts because they involve corrupt intent. In other words, the municipal employee intends to sell his office by agreeing to do or not do some official act, and the giver intends to influence him to do so. Bribes of any value are illegal.

(b) Gifts and gratuities. Asking for or accepting a gift because of your official position, or because of something you can do or have done in your official position, is prohibited. (See Sections 3, 23(b)(2), and 26)

Municipal employees may not accept gifts and gratuities valued at $50 or more given to influence their official actions or because of their official position. Accepting a gift intended to reward past official action or to bring about future official action is illegal, as is giving such gifts. Accepting a gift given to you because of the municipal position you hold is also illegal. Meals, entertainment event tickets, golf, gift baskets, and payment of travel expenses can all be illegal gifts if given in connection with official action or position, as can anything worth $50 or more. A number of smaller gifts together worth $50 or more may also violate these sections.

Example of violation : A town administrator accepts reduced rental payments from developers.

Example of violation : A developer offers a ski trip to a school district employee who oversees the developer's work for the school district.

Regulatory exemptions . There are situations in which a municipal employee's receipt of a gift does not present a genuine risk of a conflict of interest, and may in fact advance the public interest. The Commission has created exemptions permitting giving and receiving gifts in these situations. One commonly used exemption permits municipal employees to accept payment of travel-related expenses when doing so advances a public purpose. Another commonly used exemption permits municipal employees to accept payment of costs involved in attendance at educational and training programs. Other exemptions are listed on the Commission's website.

Example where there is no violation : A fire truck manufacturer offers to pay the travel expenses of a fire chief to a trade show where the chief can examine various kinds of fire-fighting equipment that the town may purchase. The chief fills out a disclosure form and obtains prior approval from his appointing authority.

Example where there is no violation : A town treasurer attends a two-day annual school featuring multiple substantive seminars on issues relevant to treasurers. The annual school is paid for in part by banks that do business with town treasurers. The treasurer is only required to make a disclosure if one of the sponsoring banks has official business before her in the six months before or after the annual school.

(c) Misuse of position. Using your official position to get something you are not entitled to, or to get someone else something they are not entitled to, is prohibited. Causing someone else to do these things is also prohibited. (See Sections 23(b)(2) and 26)

A municipal employee may not use her official position to get something worth $50 or more that would not be properly available to other similarly situated individuals. Similarly, a municipal employee may not use her official position to get something worth $50 or more for someone else that would not be properly available to other similarly situated individuals. Causing someone else to do these things is also prohibited.

Example of violation : A full-time town employee writes a novel on work time, using her office computer, and directing her secretary to proofread the draft.

Example of violation : A city councilor directs subordinates to drive the councilor's wife to and from the grocery store.

Example of violation : A mayor avoids a speeding ticket by asking the police officer who stops him, "Do you know who I am?" and showing his municipal I.D.

(d) Self-dealing and nepotism. Participating as a municipal employee in a matter in which you, your immediate family, your business organization, or your future employer has a financial interest is prohibited. (See Section 19)

A municipal employee may not participate in any particular matter in which he or a member of his immediate family (parents, children, siblings, spouse, and spouse's parents, children, and siblings) has a financial interest. He also may not participate in any particular matter in which a prospective employer, or a business organization of which he is a director, officer, trustee, or employee has a financial interest. Participation includes discussing as well as voting on a matter, and delegating a matter to someone else.

A financial interest may create a conflict of interest whether it is large or small, and positive or negative. In other words, it does not matter if a lot of money is involved or only a little. It also does not matter if you are putting money into your pocket or taking it out. If you, your immediate family, your business, or your employer have or has a financial interest in a matter, you may not participate. The financial interest must be direct and immediate or reasonably foreseeable to create a conflict. Financial interests which are remote, speculative or not sufficiently identifiable do not create conflicts.

Example of violation : A school committee member's wife is a teacher in the town's public schools. The school committee member votes on the budget line item for teachers' salaries.

Example of violation : A member of a town affordable housing committee is also the director of a non-profit housing development corporation. The non-profit makes an application to the committee, and the member/director participates in the discussion.

Example : A planning board member lives next door to property where a developer plans to construct a new building. Because the planning board member owns abutting property, he is presumed to have a financial interest in the matter. He cannot participate unless he provides the State Ethics Commission with an opinion from a qualified independent appraiser that the new construction will not affect his financial interest.

In many cases, where not otherwise required to participate, a municipal employee may comply with the law by simply not participating in the particular matter in which she has a financial interest. She need not give a reason for not participating.

There are several exemptions to this section of the law. An appointed municipal employee may file a written disclosure about the financial interest with his appointing authority, and seek permission to participate notwithstanding the conflict. The appointing authority may grant written permission if she determines that the financial interest in question is not so substantial that it is likely to affect the integrity of his services to the municipality. Participating without disclosing the financial interest is a violation. Elected employees cannot use the disclosure procedure because they have no appointing authority.

Example where there is no violation : An appointed member of the town zoning advisory committee, which will review and recommend changes to the town's by-laws with regard to a commercial district, is a partner at a company that owns commercial property in the district. Prior to participating in any committee discussions, the member files a disclosure with the zoning board of appeals that appointed him to his position, and that board gives him a written determination authorizing his participation, despite his company's financial interest. There is no violation.

There is also an exemption for both appointed and elected employees where the employee's task is to address a matter of general policy and the employee's financial interest is shared with a substantial portion (generally 10% or more) of the town's population, such as, for instance, a financial interest in real estate tax rates or municipal utility rates.

(e) False claims. Presenting a false claim to your employer for a payment or benefit is prohibited, and causing someone else to do so is also prohibited. (See Sections 23(b)(4) and 26)

A municipal employee may not present a false or fraudulent claim to his employer for any payment or benefit worth $50 or more, or cause another person to do so.

Example of violation : A public works director directs his secretary to fill out time sheets to show him as present at work on days when he was skiing.

(f) Appearance of conflict. Acting in a manner that would make a reasonable person think you can be improperly influenced is prohibited. (See Section 23(b)(3))

A municipal employee may not act in a manner that would cause a reasonable person to think that she would show favor toward someone or that she can be improperly influenced. Section 23(b)(3) requires a municipal employee to consider whether her relationships and affiliations could prevent her from acting fairly and objectively when she performs her duties for a city or town. If she cannot be fair and objective because of a relationship or affiliation, she should not perform her duties. However, a municipal employee, whether elected or appointed, can avoid violating this provision by making a public disclosure of the facts. An appointed employee must make the disclosure in writing to his appointing official.

Example where there is no violation : A developer who is the cousin of the chair of the conservation commission has filed an application with the commission. A reasonable person could conclude that the chair might favor her cousin. The chair files a written disclosure with her appointing authority explaining her relationship with her cousin prior to the meeting at which the application will be considered. There is no violation of Sec. 23(b)(3).

(g) Confidential information. Improperly disclosing or personally using confidential information obtained through your job is prohibited. (See Section 23(c))

Municipal employees may not improperly disclose confidential information, or make personal use of non-public information they acquired in the course of their official duties to further their personal interests.

III. After-hours restrictions.

(a) Taking a second paid job that conflicts with the duties of your municipal job is prohibited. (See Section 23(b)(1))

A municipal employee may not accept other paid employment if the responsibilities of the second job are incompatible with his or her municipal job.

Example : A police officer may not work as a paid private security guard in the town where he serves because the demands of his private employment would conflict with his duties as a police officer.

(b) Divided loyalties. Receiving pay from anyone other than the city or town to work on a matter involving the city or town is prohibited. Acting as agent or attorney for anyone other

than the city or town in a matter involving the city or town is also prohibited whether or not you are paid. (See Sec. 17)

Because cities and towns are entitled to the undivided loyalty of their employees, a municipal employee may not be paid by other people and organizations in relation to a matter if the city or town has an interest in the matter. In addition, a municipal employee may not act on behalf of other people and organizations or act as an attorney for other people and organizations in which the town has an interest. Acting as agent includes contacting the municipality in person, by phone, or in writing; acting as a liaison; providing documents to the city or town; and serving as spokesman.

A municipal employee may always represent his own personal interests, even before his own municipal agency or board, on the same terms and conditions that other similarly situated members of the public would be allowed to do so. A municipal employee may also apply for building and related permits on behalf of someone else and be paid for doing so, unless he works for the permitting agency, or an agency which regulates the permitting agency.

Example of violation : A full-time health agent submits a septic system plan that she has prepared for a private client to the town's board of health.

Example of violation : A planning board member represents a private client before the board of selectmen on a request that town meeting consider rezoning the client's property.

While many municipal employees earn their livelihood in municipal jobs, some municipal employees volunteer their time to provide services to the town or receive small stipends. Others, such as a private attorney who provides legal services to a town as needed, may serve in a position in which they may have other personal or private employment during normal working hours. In recognition of the need not to unduly restrict the ability of town volunteers and part-time employees to earn a living, the law is less restrictive for "special" municipal employees than for other municipal employees.

The status of "special" municipal employee has to be assigned to a municipal position by vote of the board of selectmen, city council, or similar body. A position is eligible to be designated as "special" if it is unpaid, or if it is part-time and the employee is allowed to have another job during normal working hours, or if the employee was not paid for working more than 800 hours during the preceding 365 days. It is the position that is designated as "special" and not the person or persons holding the position. Selectmen in towns of 10,000 or fewer are automatically "special"; selectman in larger towns cannot be "specials."

If a municipal position has been designated as "special," an employee holding that position may be paid by others, act on behalf of others, and act as attorney for others with respect to matters before municipal boards other than his own, provided that he has not officially participated in the

matter, and the matter is not now, and has not within the past year been, under his official responsibility.

Example : A school committee member who has been designated as a special municipal employee appears before the board of health on behalf of a client of his private law practice, on a matter that he has not participated in or had responsibility for as a school committee member. There is no conflict. However, he may not appear before the school committee, or the school department, on behalf of a client because he has official responsibility for any matter that comes before the school committee. This is still the case even if he has recused himself from participating in the matter in his official capacity.

Example : A member who sits as an alternate on the conservation commission is a special municipal employee. Under town by-laws, he only has official responsibility for matters assigned to him. He may represent a resident who wants to file an application with the conservation commission as long as the matter is not assigned to him and he will not participate in it.

(c) Inside track. Being paid by your city or town, directly or indirectly, under some second arrangement in addition to your job is prohibited, unless an exemption applies. (See Section 20)

A municipal employee generally may not have a financial interest in a municipal contract, including a second municipal job. A municipal employee is also generally prohibited from having an indirect financial interest in a contract that the city or town has with someone else. This provision is intended to prevent municipal employees from having an "inside track" to further financial opportunities.

Example of violation : Legal counsel to the town housing authority becomes the acting executive director of the authority, and is paid in both positions.

Example of violation : A selectman buys a surplus truck from the town DPW.

Example of violation : A full-time secretary for the board of health wants to have a second paid job working part-time for the town library. She will violate Section 20 unless she can meet the requirements of an exemption.

Example of violation : A city councilor wants to work for a non-profit that receives funding under a contract with her city. Unless she can satisfy the requirements of an exemption under Section 20, she cannot take the job.

There are numerous exemptions. A municipal employee may hold multiple unpaid or elected positions. Some exemptions apply only to special municipal employees. Specific exemptions may cover serving as an unpaid volunteer in a second town position, housing-related benefits, public safety positions, certain elected positions, small towns, and other specific situations. Please call the Ethics Commission's Legal Division for advice about a specific situation.

IV. After you leave municipal employment. (See Section 18)

(a) Forever ban. After you leave your municipal job, you may never work for anyone other than the municipality on a matter that you worked on as a municipal employee.

If you participated in a matter as a municipal employee, you cannot ever be paid to work on that same matter for anyone other than the municipality, nor may you act for someone else, whether paid or not. The purpose of this restriction is to bar former employees from selling to private interests their familiarity with the facts of particular matters that are of continuing concern to their former municipal employer. The restriction does not prohibit former municipal employees from using the expertise acquired in government service in their subsequent private activities.

Example of violation : A former school department employee works for a contractor under a contract that she helped to draft and oversee for the school department.

(b) One year cooling-off period. For one year after you leave your municipal job you may not participate in any matter over which you had official responsibility during your last two years of public service.

Former municipal employees are barred for one year after they leave municipal employment from personally appearing before any agency of the municipality in connection with matters that were under their authority in their prior municipal positions during the two years before they left.

Example : An assistant town manager negotiates a three-year contract with a company. The town manager who supervised the assistant, and had official responsibility for the contract but did not participate in negotiating it, leaves her job to work for the company to which the contract was awarded. The former manager may not call or write the town in connection with the company's work on the contract for one year after leaving the town.

A former municipal employee who participated as such in general legislation on expanded gaming and related matters may not become an officer or employee of, or acquire a financial interest in, an applicant for a gaming license, or a gaming licensee, for one year after his public employment ceases.

(c) Partners. Your partners will be subject to restrictions while you serve as a municipal employee and after your municipal service ends.

Partners of municipal employees and former municipal employees are also subject to restrictions under the conflict of interest law. If a municipal employee participated in a matter, or if he has official responsibility for a matter, then his partner may not act on behalf of anyone other than the municipality or provide services as an attorney to anyone but the city or town in relation to the matter.

Example : While serving on a city's historic district commission, an architect reviewed an application to get landmark status for a building. His partners at his architecture firm may not prepare and sign plans for the owner of the building or otherwise act on the owner's behalf in relation to the application for landmark status. In addition, because the architect has official responsibility as a commissioner for every matter that comes before the commission, his partners may not communicate with the commission or otherwise act on behalf of any client on any matter that comes before the commission during the time that the architect serves on the commission.

Example : A former town counsel joins a law firm as a partner. Because she litigated a lawsuit for the town, her new partners cannot represent any private clients in the lawsuit for one year after her job with the town ended.

* * * * *

This summary is not intended to be legal advice and, because it is a summary, it does not mention every provision of the conflict law that may apply in a particular situation. Our website, http://www.mass.gov/ethics contains further information about how the law applies in many situations. You can also contact the Commission's Legal Division via our website, by telephone, or by letter. Our contact information is at the top of this document.

Version 5: Revised December 23, 2011

City of Chelsea
Conflict of Interest Law

Compliance Statement and Requirements for Vendors

ACKNOWLEDGMENT OF RECEIPT

I, _____,
(first and last name)

an employee at _____,
(name of vendor)

hereby acknowledge that I received a copy of the summary of the conflict of interest law for municipal employees, revised December 23, 2011,on

_____.
(date)

The City has a requirement for compliance, which is to make sure that all **vendors** are provided copies of the Summary of the Conflict of Interest Law for Municipal Employees (including Vendors).

VENDORS should copy the Summary of the Conflict of Interest Law and provide it to each one of the employees who are assigned to work in Chelsea.

Each employee shall complete the "Acknowledgment of Receipt" and the Vendor shall return the acknowledgments-only (not the Summary) to the Chelsea the Chelsea Procurement Office.

The "Acknowledgment of Receipt" must be submitted along with any purchase order or contract with the City of Chelsea

THE COMMONWEALTH OF MASSACHUSETTS
EXECUTIVE OFFICE OF LABOR AND WORKFORCE DEVELOPMENT
DEPARTMENT OF LABOR STANDARDS

DEVAL L. PATRICK
Governor

Prevailing Wage Rates

As determined by the Director under the provisions of the Massachusetts General Laws, Chapter 149, Sections 26 to 27H

RACHEL KAPRIELIAN
Secretary

HEATHER E. ROWE
Director

Awarding Authority: City of Chelsea

Contract Number: 2015-105 **City/Town:** CHELSEA

Description of Work: Replacement of existing outdoor lighting fixtures at the MCB Complex

Job Location: 300 Cresent Ave

Information about Prevailing Wage Schedules for Awarding Authorities and Contractors

- This wage schedule applies only to the specific project referenced at the top of this page and uniquely identified by the "Wage Request Number" on all pages of this schedule.
- An Awarding Authority must request an updated wage schedule from the Department of Labor Standards ("DLS") if it has not opened bids or selected a contractor within 90 days of the date of issuance of the wage schedule. For CM AT RISK projects (bid pursuant to G.L. c.149A), the earlier of: (a) the execution date of the GMP Amendment, or (b) the bid for the first construction scope of work must be within 90-days of the wage schedule issuance date.
- The wage schedule shall be incorporated in any advertisement or call for bids for the project as required by M.G.L. c. 149, § 27. The wage schedule shall be made a part of the contract awarded for the project. The wage schedule must be posted in a conspicuous place at the work site for the life of the project in accordance with M.G.L. c. 149 § 27. The wages listed on the wage schedule must be paid to employees performing construction work on the project whether they are employed by the prime contractor, a filed sub-bidder, or any sub-contractor.
- All apprentices working on the project are required to be registered with the Massachusetts Division of Apprentice Standards (DAS). Apprentice must keep his/her apprentice identification card on his/her person during all work hours on the project. An apprentice registered with DAS may be paid the lower apprentice wage rate at the applicable step as provided on the prevailing wage schedule. **If an apprentice rate is not listed on the prevailing wage schedule for the trade in which an apprentice is registered with the DAS, the apprentice must be paid the journeyworker's rate for the trade.**
- The wage rates will remain in effect for the duration of the project, except in the case of multi-year public construction projects. For construction projects lasting longer than one year, awarding authorities must request an updated wage schedule. Awarding authorities are required to request these updates no later than two weeks before the anniversary of the date the contract was executed by the awarding authority and the general contractor. For multi-year CM AT RISK projects, awarding authority must request an annual update no later than two weeks before the anniversary date, determined as the earlier of: (a) the execution date of the GMP Amendment, or (b) the execution date of the first amendment to permit procurement of construction services. Contractors are required to obtain the wage schedules from awarding authorities, and to pay no less than these rates to covered workers. The annual update requirement is not applicable to 27F "rental of equipment" contracts.
- Every contractor or subcontractor which performs construction work on the project is required to submit weekly payroll reports and a Statement of Compliance directly to the awarding authority by mail or email and keep them on file for three years. Each weekly payroll report must contain: the employee's name, address, occupational classification, hours worked, and wages paid. Do not submit weekly payroll reports to DLS. A sample of a payroll reporting form may be obtained at http://www.mass.gov/dols/pw.
- Contractors with questions about the wage rates or classifications included on the wage schedule have an affirmative obligation to inquire with DLS at (617) 626-6953.
- Employees not receiving the prevailing wage rate set forth on the wage schedule may report the violation to the Fair Labor Division of the office of the Attorney General at (617) 727-3465.
- Failure of a contractor or subcontractor to pay the prevailing wage rates listed on the wage schedule to all employees who perform construction work on the project is a violation of the law and subjects the contractor or subcontractor to civil and criminal penalties.

Issue Date: 12/17/2014 **Wage Request Number:** 20141217-021

Classification	Effective Date	Base Wage	Health	Pension	Supplemental Unemployment	Total Rate
Construction						
(2 AXLE) DRIVER - EQUIPMENT *TEAMSTERS JOINT COUNCIL NO. 10 ZONE A*	12/01/2014	$32.40	$9.91	$9.33	$0.00	$51.64
	06/01/2015	$32.75	$9.91	$9.33	$0.00	$51.99
	08/01/2015	$32.75	$10.41	$9.33	$0.00	$52.49
	12/01/2015	$32.75	$10.41	$10.08	$0.00	$53.24
	06/01/2016	$33.25	$10.41	$10.08	$0.00	$53.74
	08/01/2016	$33.25	$10.91	$10.08	$0.00	$54.24
	12/01/2016	$33.25	$10.91	$10.89	$0.00	$55.05
(3 AXLE) DRIVER - EQUIPMENT *TEAMSTERS JOINT COUNCIL NO. 10 ZONE A*	12/01/2014	$32.47	$9.91	$9.33	$0.00	$51.71
	06/01/2015	$32.82	$9.91	$9.33	$0.00	$52.06
	08/01/2015	$32.82	$10.41	$9.33	$0.00	$52.56
	12/01/2015	$32.82	$10.41	$10.08	$0.00	$53.31
	06/01/2016	$33.32	$10.41	$10.08	$0.00	$53.81
	08/01/2016	$33.32	$10.91	$10.08	$0.00	$54.31
	12/01/2016	$33.32	$10.91	$10.89	$0.00	$55.12
(4 & 5 AXLE) DRIVER - EQUIPMENT *TEAMSTERS JOINT COUNCIL NO. 10 ZONE A*	12/01/2014	$32.59	$9.91	$9.33	$0.00	$51.83
	06/01/2015	$32.94	$9.91	$9.33	$0.00	$52.18
	08/01/2015	$32.94	$10.41	$9.33	$0.00	$52.68
	12/01/2015	$32.94	$10.41	$10.08	$0.00	$53.43
	06/01/2016	$33.44	$10.41	$10.08	$0.00	$53.93
	08/01/2016	$33.44	$10.91	$10.08	$0.00	$54.43
	12/01/2016	$33.44	$10.91	$10.89	$0.00	$55.24
ADS/SUBMERSIBLE PILOT *PILE DRIVER LOCAL 56 (ZONE 1)*	08/01/2014	$87.36	$9.80	$18.17	$0.00	$115.33
	08/01/2015	$90.51	$9.80	$18.17	$0.00	$118.48
AIR TRACK OPERATOR *LABORERS - ZONE 1*	12/01/2014	$35.60	$7.30	$12.70	$0.00	$55.60
	06/01/2015	$36.35	$7.30	$12.70	$0.00	$56.35
	12/01/2015	$37.10	$7.30	$12.70	$0.00	$57.10
	06/01/2016	$37.85	$7.30	$12.70	$0.00	$57.85
	12/01/2016	$38.85	$7.30	$12.70	$0.00	$58.85
For apprentice rates see "Apprentice- LABORER"						
ASBESTOS REMOVER - PIPE / MECH. EQUIPT. *HEAT & FROST INSULATORS LOCAL 6 (BOSTON)*	12/01/2014	$32.48	$10.40	$5.95	$0.00	$48.83
	06/01/2015	$33.43	$10.40	$5.95	$0.00	$49.78
	12/01/2015	$34.38	$10.40	$5.95	$0.00	$50.73
ASPHALT RAKER *LABORERS - ZONE 1*	12/01/2014	$35.10	$7.30	$12.70	$0.00	$55.10
	06/01/2015	$35.85	$7.30	$12.70	$0.00	$55.85
	12/01/2015	$36.60	$7.30	$12.70	$0.00	$56.60
	06/01/2016	$37.35	$7.30	$12.70	$0.00	$57.35
	12/01/2016	$38.35	$7.30	$12.70	$0.00	$58.35
For apprentice rates see "Apprentice- LABORER"						
ASPHALT/CONCRETE/CRUSHER PLANT-ON SITE *OPERATING ENGINEERS LOCAL 4*	12/01/2014	$42.39	$10.00	$14.30	$0.00	$66.69
	06/01/2015	$43.14	$10.00	$14.30	$0.00	$67.44
	12/01/2015	$44.39	$10.00	$14.30	$0.00	$68.69
	06/01/2016	$45.14	$10.00	$14.30	$0.00	$69.44
	12/01/2016	$46.39	$10.00	$14.30	$0.00	$70.69
	06/01/2017	$47.39	$10.00	$14.30	$0.00	$71.69
	12/01/2017	$48.39	$10.00	$14.30	$0.00	$72.69

Classification	Effective Date	Base Wage	Health	Pension	Supplemental Unemployment	Total Rate
For apprentice rates see "Apprentice- OPERATING ENGINEERS"						
BACKHOE/FRONT-END LOADER *OPERATING ENGINEERS LOCAL 4*	12/01/2014	$42.39	$10.00	$14.30	$0.00	$66.69
	06/01/2015	$43.14	$10.00	$14.30	$0.00	$67.44
	12/01/2015	$44.39	$10.00	$14.30	$0.00	$68.69
	06/01/2016	$45.14	$10.00	$14.30	$0.00	$69.44
	12/01/2016	$46.39	$10.00	$14.30	$0.00	$70.69
	06/01/2017	$47.39	$10.00	$14.30	$0.00	$71.69
	12/01/2017	$48.39	$10.00	$14.30	$0.00	$72.69
For apprentice rates see "Apprentice- OPERATING ENGINEERS"						
BARCO-TYPE JUMPING TAMPER *LABORERS - ZONE 1*	12/01/2014	$35.10	$7.30	$12.70	$0.00	$55.10
	06/01/2015	$35.85	$7.30	$12.70	$0.00	$55.85
	12/01/2015	$36.60	$7.30	$12.70	$0.00	$56.60
	06/01/2016	$37.35	$7.30	$12.70	$0.00	$57.35
	12/01/2016	$38.35	$7.30	$12.70	$0.00	$58.35
For apprentice rates see "Apprentice- LABORER"						
BLOCK PAVER, RAMMER / CURB SETTER *LABORERS - ZONE 1*	12/01/2014	$35.60	$7.30	$12.70	$0.00	$55.60
	06/01/2015	$36.35	$7.30	$12.70	$0.00	$56.35
	12/01/2015	$37.10	$7.30	$12.70	$0.00	$57.10
	06/01/2016	$37.85	$7.30	$12.70	$0.00	$57.85
	12/01/2016	$38.85	$7.30	$12.70	$0.00	$58.85
For apprentice rates see "Apprentice- LABORER"						
BOILER MAKER *BOILERMAKERS LOCAL 29*	01/01/2010	$37.70	$6.97	$11.18	$0.00	$55.85

Apprentice - *BOILERMAKER - Local 29*

Effective Date - 01/01/2010

Step	percent	Apprentice Base Wage	Health	Pension	Supplemental Unemployment	Total Rate
1	65	$24.51	$6.97	$11.18	$0.00	$42.66
2	65	$24.51	$6.97	$11.18	$0.00	$42.66
3	70	$26.39	$6.97	$11.18	$0.00	$44.54
4	75	$28.28	$6.97	$11.18	$0.00	$46.43
5	80	$30.16	$6.97	$11.18	$0.00	$48.31
6	85	$32.05	$6.97	$11.18	$0.00	$50.20
7	90	$33.93	$6.97	$11.18	$0.00	$52.08
8	95	$35.82	$6.97	$11.18	$0.00	$53.97

Notes:

Apprentice to Journeyworker Ratio:1:5

BRICK/STONE/ARTIFICIAL MASONRY (INCL. MASONRY WATERPROOFING) *BRICKLAYERS LOCAL 3 (BOSTON)*	08/01/2014	$48.96	$10.18	$18.22	$0.00	$77.36
	02/01/2015	$49.52	$10.18	$18.22	$0.00	$77.92
	08/01/2015	$50.42	$10.18	$18.29	$0.00	$78.89
	02/01/2016	$50.99	$10.18	$18.29	$0.00	$79.46
	08/01/2016	$51.89	$10.18	$18.37	$0.00	$80.44
	02/01/2017	$52.46	$10.18	$18.37	$0.00	$81.01

Classification	Effective Date	Base Wage	Health	Pension	Supplemental Unemployment	Total Rate

Apprentice - *BRICK/PLASTER/CEMENT MASON - Local 3 Boston*

Effective Date - 08/01/2014

Step	percent	Apprentice Base Wage	Health	Pension	Supplemental Unemployment	Total Rate
1	50	$24.48	$10.18	$18.22	$0.00	$52.88
2	60	$29.38	$10.18	$18.22	$0.00	$57.78
3	70	$34.27	$10.18	$18.22	$0.00	$62.67
4	80	$39.17	$10.18	$18.22	$0.00	$67.57
5	90	$44.06	$10.18	$18.22	$0.00	$72.46

Effective Date - 02/01/2015

Step	percent	Apprentice Base Wage	Health	Pension	Supplemental Unemployment	Total Rate
1	50	$24.76	$10.18	$18.22	$0.00	$53.16
2	60	$29.71	$10.18	$18.22	$0.00	$58.11
3	70	$34.66	$10.18	$18.22	$0.00	$63.06
4	80	$39.62	$10.18	$18.22	$0.00	$68.02
5	90	$44.57	$10.18	$18.22	$0.00	$72.97

Notes:

Apprentice to Journeyworker Ratio:1:5

BULLDOZER/GRADER/SCRAPER *OPERATING ENGINEERS LOCAL 4*	12/01/2014	$41.99	$10.00	$14.30	$0.00	$66.29
	06/01/2015	$42.73	$10.00	$14.30	$0.00	$67.03
	12/01/2015	$43.97	$10.00	$14.30	$0.00	$68.27
	06/01/2016	$44.72	$10.00	$14.30	$0.00	$69.02
	12/01/2016	$45.95	$10.00	$14.30	$0.00	$70.25
	06/01/2017	$46.94	$10.00	$14.30	$0.00	$71.24
	12/01/2017	$47.93	$10.00	$14.30	$0.00	$72.23
For apprentice rates see "Apprentice- OPERATING ENGINEERS"						
CAISSON & UNDERPINNING BOTTOM MAN *LABORERS - FOUNDATION AND MARINE*	12/01/2014	$35.95	$7.30	$12.90	$0.00	$56.15
	06/01/2015	$36.70	$7.30	$12.90	$0.00	$56.90
	12/01/2015	$37.45	$7.30	$12.90	$0.00	$57.65
	06/01/2016	$38.20	$7.30	$12.90	$0.00	$58.40
	12/01/2016	$39.20	$7.30	$12.90	$0.00	$59.40
For apprentice rates see "Apprentice- LABORER"						
CAISSON & UNDERPINNING LABORER *LABORERS - FOUNDATION AND MARINE*	12/01/2014	$34.80	$7.30	$12.90	$0.00	$55.00
	06/01/2015	$35.55	$7.30	$12.90	$0.00	$55.75
	12/01/2015	$36.30	$7.30	$12.90	$0.00	$56.50
	06/01/2016	$37.05	$7.30	$12.90	$0.00	$57.25
	12/01/2016	$38.05	$7.30	$12.90	$0.00	$58.25
For apprentice rates see "Apprentice- LABORER"						

Classification	Effective Date	Base Wage	Health	Pension	Supplemental Unemployment	Total Rate
CAISSON & UNDERPINNING TOP MAN *LABORERS - FOUNDATION AND MARINE*	12/01/2014	$34.80	$7.30	$12.90	$0.00	$55.00
	06/01/2015	$35.55	$7.30	$12.90	$0.00	$55.75
	12/01/2015	$36.30	$7.30	$12.90	$0.00	$56.50
	06/01/2016	$37.05	$7.30	$12.90	$0.00	$57.25
	12/01/2016	$38.05	$7.30	$12.90	$0.00	$58.25
For apprentice rates see "Apprentice- LABORER"						
CARBIDE CORE DRILL OPERATOR *LABORERS - ZONE 1*	12/01/2014	$35.10	$7.30	$12.70	$0.00	$55.10
	06/01/2015	$35.85	$7.30	$12.70	$0.00	$55.85
	12/01/2015	$36.60	$7.30	$12.70	$0.00	$56.60
	06/01/2016	$37.35	$7.30	$12.70	$0.00	$57.35
	12/01/2016	$38.35	$7.30	$12.70	$0.00	$58.35
For apprentice rates see "Apprentice- LABORER"						
CARPENTER *CARPENTERS -ZONE 1 (Metro Boston)*	09/01/2014	$41.65	$9.80	$16.11	$0.00	$67.56
	03/01/2015	$42.67	$9.80	$16.11	$0.00	$68.58

Apprentice - *CARPENTER - Zone 1 Metro Boston*

Effective Date - 09/01/2014

Step	percent	Apprentice Base Wage	Health	Pension	Supplemental Unemployment	Total Rate
1	50	$20.83	$9.80	$1.57	$0.00	$32.20
2	60	$24.99	$9.80	$1.57	$0.00	$36.36
3	70	$29.16	$9.80	$11.40	$0.00	$50.36
4	75	$31.24	$9.80	$11.40	$0.00	$52.44
5	80	$33.32	$9.80	$12.97	$0.00	$56.09
6	80	$33.32	$9.80	$12.97	$0.00	$56.09
7	90	$37.49	$9.80	$14.54	$0.00	$61.83
8	90	$37.49	$9.80	$14.54	$0.00	$61.83

Effective Date - 03/01/2015

Step	percent	Apprentice Base Wage	Health	Pension	Supplemental Unemployment	Total Rate
1	50	$21.34	$9.80	$1.57	$0.00	$32.71
2	60	$25.60	$9.80	$1.57	$0.00	$36.97
3	70	$29.87	$9.80	$11.40	$0.00	$51.07
4	75	$32.00	$9.80	$11.40	$0.00	$53.20
5	80	$34.14	$9.80	$12.97	$0.00	$56.91
6	80	$34.14	$9.80	$12.97	$0.00	$56.91
7	90	$38.40	$9.80	$14.54	$0.00	$62.74
8	90	$38.40	$9.80	$14.54	$0.00	$62.74

Notes:

Apprentice to Journeyworker Ratio:1:5

CEMENT MASONRY/PLASTERING *BRICKLAYERS LOCAL 3 (BOSTON)*	07/01/2014	$43.77	$10.90	$18.71	$1.30	$74.68
	01/01/2015	$44.69	$10.90	$18.71	$1.30	$75.60
	07/01/2015	$45.29	$10.90	$18.71	$1.30	$76.20
	01/01/2016	$46.21	$10.90	$18.71	$1.30	$77.12

Classification	Effective Date	Base Wage	Health	Pension	Supplemental Unemployment	Total Rate

Apprentice - *CEMENT MASONRY/PLASTERING - Eastern Mass (Boston)*

Effective Date - 07/01/2014

Step	percent	Apprentice Base Wage	Health	Pension	Supplemental Unemployment	Total Rate
1	50	$21.89	$10.90	$12.21	$1.30	$46.30
2	60	$26.26	$10.90	$13.71	$1.30	$52.17
3	65	$28.45	$10.90	$14.71	$1.30	$55.36
4	70	$30.64	$10.90	$15.71	$1.30	$58.55
5	75	$32.83	$10.90	$16.71	$1.30	$61.74
6	80	$35.02	$10.90	$17.71	$1.30	$64.93
7	90	$39.39	$10.90	$18.71	$1.30	$70.30

Effective Date - 01/01/2015

Step	percent	Apprentice Base Wage	Health	Pension	Supplemental Unemployment	Total Rate
1	50	$22.35	$10.90	$12.21	$1.30	$46.76
2	60	$26.81	$10.90	$13.71	$1.30	$52.72
3	65	$29.05	$10.90	$14.71	$1.30	$55.96
4	70	$31.28	$10.90	$15.71	$1.30	$59.19
5	75	$33.52	$10.90	$16.71	$1.30	$62.43
6	80	$35.75	$10.90	$17.71	$1.30	$65.66
7	90	$40.22	$10.90	$18.71	$1.30	$71.13

Notes:

Steps 3,4 are 500 hrs. All other steps are 1,000 hrs.

Apprentice to Journeyworker Ratio:1:3

CHAIN SAW OPERATOR *LABORERS - ZONE 1*	12/01/2014	$35.10	$7.30	$12.70	$0.00	$55.10
	06/01/2015	$35.85	$7.30	$12.70	$0.00	$55.85
	12/01/2015	$36.60	$7.30	$12.70	$0.00	$56.60
	06/01/2016	$37.35	$7.30	$12.70	$0.00	$57.35
	12/01/2016	$38.35	$7.30	$12.70	$0.00	$58.35

For apprentice rates see "Apprentice- LABORER"

CLAM SHELLS/SLURRY BUCKETS/HEADING MACHINES *OPERATING ENGINEERS LOCAL 4*	12/01/2014	$43.39	$10.00	$14.30	$0.00	$67.69
	06/01/2015	$44.14	$10.00	$14.30	$0.00	$68.44
	12/01/2015	$45.39	$10.00	$14.30	$0.00	$69.69
	06/01/2016	$46.14	$10.00	$14.30	$0.00	$70.44
	12/01/2016	$47.39	$10.00	$14.30	$0.00	$71.69
	06/01/2017	$48.39	$10.00	$14.30	$0.00	$72.69
	12/01/2017	$49.39	$10.00	$14.30	$0.00	$73.69

For apprentice rates see "Apprentice- OPERATING ENGINEERS"

Classification	Effective Date	Base Wage	Health	Pension	Supplemental Unemployment	Total Rate
COMPRESSOR OPERATOR *OPERATING ENGINEERS LOCAL 4*	12/01/2014	$29.40	$10.00	$14.30	$0.00	$53.70
	06/01/2015	$29.92	$10.00	$14.30	$0.00	$54.22
	12/01/2015	$30.79	$10.00	$14.30	$0.00	$55.09
	06/01/2016	$31.31	$10.00	$14.30	$0.00	$55.61
	12/01/2016	$32.18	$10.00	$14.30	$0.00	$56.48
	06/01/2017	$32.87	$10.00	$14.30	$0.00	$57.17
	12/01/2017	$33.56	$10.00	$14.30	$0.00	$57.86
For apprentice rates see "Apprentice- OPERATING ENGINEERS"						
DELEADER (BRIDGE) *PAINTERS LOCAL 35 - ZONE 1*	07/01/2014	$46.76	$7.85	$16.10	$0.00	$70.71
	01/01/2015	$47.66	$7.85	$16.10	$0.00	$71.61
	07/01/2015	$48.56	$7.85	$16.10	$0.00	$72.51
	01/01/2016	$49.51	$7.85	$16.10	$0.00	$73.46
	07/01/2016	$50.46	$7.85	$16.10	$0.00	$74.41
	01/01/2017	$51.41	$7.85	$16.10	$0.00	$75.36

Apprentice - *PAINTER Local 35 - BRIDGES/TANKS*

Effective Date - 07/01/2014

Step	percent	Apprentice Base Wage	Health	Pension	Supplemental Unemployment	Total Rate
1	50	$23.38	$7.85	$0.00	$0.00	$31.23
2	55	$25.72	$7.85	$3.66	$0.00	$37.23
3	60	$28.06	$7.85	$3.99	$0.00	$39.90
4	65	$30.39	$7.85	$4.32	$0.00	$42.56
5	70	$32.73	$7.85	$14.11	$0.00	$54.69
6	75	$35.07	$7.85	$14.44	$0.00	$57.36
7	80	$37.41	$7.85	$14.77	$0.00	$60.03
8	90	$42.08	$7.85	$15.44	$0.00	$65.37

Effective Date - 01/01/2015

Step	percent	Apprentice Base Wage	Health	Pension	Supplemental Unemployment	Total Rate
1	50	$23.83	$7.85	$0.00	$0.00	$31.68
2	55	$26.21	$7.85	$3.66	$0.00	$37.72
3	60	$28.60	$7.85	$3.99	$0.00	$40.44
4	65	$30.98	$7.85	$4.32	$0.00	$43.15
5	70	$33.36	$7.85	$14.11	$0.00	$55.32
6	75	$35.75	$7.85	$14.44	$0.00	$58.04
7	80	$38.13	$7.85	$14.77	$0.00	$60.75
8	90	$42.89	$7.85	$15.44	$0.00	$66.18

Notes:

Steps are 750 hrs.

Apprentice to Journeyworker Ratio:1:1

DEMO: ADZEMAN *LABORERS - ZONE 1*	12/01/2014	$35.00	$7.30	$12.70	$0.00	$55.00
	06/01/2015	$35.75	$7.30	$12.70	$0.00	$55.75
	12/01/2015	$36.50	$7.30	$12.70	$0.00	$56.50
For apprentice rates see "Apprentice- LABORER"						

Classification	Effective Date	Base Wage	Health	Pension	Supplemental Unemployment	Total Rate
DEMO: BACKHOE/LOADER/HAMMER OPERATOR *LABORERS - ZONE 1*	12/01/2014	$36.00	$7.30	$12.70	$0.00	$56.00
	06/01/2015	$36.75	$7.30	$12.70	$0.00	$56.75
	12/01/2015	$37.50	$7.30	$12.70	$0.00	$57.50
For apprentice rates see "Apprentice- LABORER"						
DEMO: BURNERS *LABORERS - ZONE 1*	12/01/2014	$35.75	$7.30	$12.70	$0.00	$55.75
	06/01/2015	$36.50	$7.30	$12.70	$0.00	$56.50
	12/01/2015	$37.25	$7.30	$12.70	$0.00	$57.25
For apprentice rates see "Apprentice- LABORER"						
DEMO: CONCRETE CUTTER/SAWYER *LABORERS - ZONE 1*	12/01/2014	$36.00	$7.30	$12.70	$0.00	$56.00
	06/01/2015	$36.75	$7.30	$12.70	$0.00	$56.75
	12/01/2015	$37.50	$7.30	$12.70	$0.00	$57.50
For apprentice rates see "Apprentice- LABORER"						
DEMO: JACKHAMMER OPERATOR *LABORERS - ZONE 1*	12/01/2014	$35.75	$7.30	$12.70	$0.00	$55.75
	06/01/2015	$36.50	$7.30	$12.70	$0.00	$56.50
	12/01/2015	$37.25	$7.30	$12.70	$0.00	$57.25
For apprentice rates see "Apprentice- LABORER"						
DEMO: WRECKING LABORER *LABORERS - ZONE 1*	12/01/2014	$35.00	$7.30	$12.70	$0.00	$55.00
	06/01/2015	$35.75	$7.30	$12.70	$0.00	$55.75
	12/01/2015	$36.50	$7.30	$12.70	$0.00	$56.50
For apprentice rates see "Apprentice- LABORER"						
DIRECTIONAL DRILL MACHINE OPERATOR *OPERATING ENGINEERS LOCAL 4*	12/01/2014	$41.99	$10.00	$14.30	$0.00	$66.29
	06/01/2015	$42.73	$10.00	$14.30	$0.00	$67.03
	12/01/2015	$43.97	$10.00	$14.30	$0.00	$68.27
	06/01/2016	$44.72	$10.00	$14.30	$0.00	$69.02
	12/01/2016	$45.95	$10.00	$14.30	$0.00	$70.25
	06/01/2017	$46.94	$10.00	$14.30	$0.00	$71.24
	12/01/2017	$47.93	$10.00	$14.30	$0.00	$72.23
For apprentice rates see "Apprentice- OPERATING ENGINEERS"						
DIVER *PILE DRIVER LOCAL 56 (ZONE 1)*	08/01/2014	$58.24	$9.80	$18.17	$0.00	$86.21
	08/01/2015	$60.34	$9.80	$18.17	$0.00	$88.31
DIVER TENDER *PILE DRIVER LOCAL 56 (ZONE 1)*	08/01/2014	$41.60	$9.80	$18.17	$0.00	$69.57
	08/01/2015	$43.10	$9.80	$18.17	$0.00	$71.07
DIVER TENDER (EFFLUENT) *PILE DRIVER LOCAL 56 (ZONE 1)*	08/01/2014	$62.40	$9.80	$18.17	$0.00	$90.37
	08/01/2015	$64.65	$9.80	$18.17	$0.00	$92.62
DIVER/SLURRY (EFFLUENT) *PILE DRIVER LOCAL 56 (ZONE 1)*	08/01/2014	$87.36	$9.80	$18.17	$0.00	$115.33
	08/01/2015	$90.51	$9.80	$18.17	$0.00	$118.48
DRAWBRIDGE OPERATOR (Construction) *ELECTRICIANS LOCAL 103*	09/01/2014	$44.79	$13.00	$15.04	$0.00	$72.83
	03/01/2015	$45.17	$13.00	$15.40	$0.00	$73.57
	09/01/2015	$46.13	$13.00	$15.43	$0.00	$74.56
	03/01/2016	$47.08	$13.00	$15.46	$0.00	$75.54
For apprentice rates see "Apprentice- ELECTRICIAN"						
ELECTRICIAN *ELECTRICIANS LOCAL 103*	09/01/2014	$44.79	$13.00	$15.04	$0.00	$72.83
	03/01/2015	$45.17	$13.00	$15.40	$0.00	$73.57
	09/01/2015	$46.13	$13.00	$15.43	$0.00	$74.56
	03/01/2016	$47.08	$13.00	$15.46	$0.00	$75.54

Classification	Effective Date	Base Wage	Health	Pension	Supplemental Unemployment	Total Rate

Apprentice - *ELECTRICIAN - Local 103*

Effective Date - 09/01/2014

Step	percent	Apprentice Base Wage	Health	Pension	Supplemental Unemployment	Total Rate
1	40	$17.92	$13.00	$0.54	$0.00	$31.46
2	40	$17.92	$13.00	$0.54	$0.00	$31.46
3	45	$20.16	$13.00	$11.33	$0.00	$44.49
4	45	$20.16	$13.00	$11.33	$0.00	$44.49
5	50	$22.40	$13.00	$11.67	$0.00	$47.07
6	55	$24.63	$13.00	$12.01	$0.00	$49.64
7	60	$26.87	$13.00	$12.35	$0.00	$52.22
8	65	$29.11	$13.00	$12.68	$0.00	$54.79
9	70	$31.35	$13.00	$13.02	$0.00	$57.37
10	75	$33.59	$13.00	$13.36	$0.00	$59.95

Effective Date - 03/01/2015

Step	percent	Apprentice Base Wage	Health	Pension	Supplemental Unemployment	Total Rate
1	40	$18.07	$13.00	$0.54	$0.00	$31.61
2	40	$18.07	$13.00	$0.54	$0.00	$31.61
3	45	$20.33	$13.00	$11.63	$0.00	$44.96
4	45	$20.33	$13.00	$11.63	$0.00	$44.96
5	50	$22.59	$13.00	$11.97	$0.00	$47.56
6	55	$24.84	$13.00	$12.32	$0.00	$50.16
7	60	$27.10	$13.00	$12.66	$0.00	$52.76
8	65	$29.36	$13.00	$13.00	$0.00	$55.36
9	70	$31.62	$13.00	$13.34	$0.00	$57.96
10	75	$33.88	$13.00	$13.69	$0.00	$60.57

Notes: :

App Prior 1/1/03; 30/35/40/45/50/55/65/70/75/80

Apprentice to Journeyworker Ratio:2:3***

ELEVATOR CONSTRUCTOR *ELEVATOR CONSTRUCTORS LOCAL 4*	01/01/2012	$52.45	$8.78	$6.96	$0.00	$68.19

Classification	Effective Date	Base Wage	Health	Pension	Supplemental Unemployment	Total Rate

Apprentice - *ELEVATOR CONSTRUCTOR - Local 4*

Effective Date - 01/01/2012

Step	percent	Apprentice Base Wage	Health	Pension	Supplemental Unemployment	Total Rate
1	50	$26.23	$8.78	$0.00	$0.00	$35.01
2	55	$28.85	$8.78	$6.96	$0.00	$44.59
3	65	$34.09	$8.78	$6.96	$0.00	$49.83
4	70	$36.72	$8.78	$6.96	$0.00	$52.46
5	80	$41.96	$8.78	$6.96	$0.00	$57.70

Notes:

Steps 1-2 are 6 mos.; Steps 3-5 are 1 year

Apprentice to Journeyworker Ratio:1:1

ELEVATOR CONSTRUCTOR HELPER *ELEVATOR CONSTRUCTORS LOCAL 4*	01/01/2012	$38.59	$8.78	$6.96	$0.00	$54.33
For apprentice rates see "Apprentice - ELEVATOR CONSTRUCTOR"						
FENCE & GUARD RAIL ERECTOR *LABORERS - ZONE 1*	12/01/2014	$35.10	$7.30	$12.70	$0.00	$55.10
	06/01/2015	$35.85	$7.30	$12.70	$0.00	$55.85
	12/01/2015	$36.60	$7.30	$12.70	$0.00	$56.60
	06/01/2016	$37.35	$7.30	$12.70	$0.00	$57.35
	12/01/2016	$38.35	$7.30	$12.70	$0.00	$58.35
For apprentice rates see "Apprentice- LABORER"						
FIELD ENG.INST.PERSON-BLDG,SITE,HVY/HWY *OPERATING ENGINEERS LOCAL 4*	05/01/2014	$38.87	$10.00	$14.18	$0.00	$63.05
For apprentice rates see "Apprentice- OPERATING ENGINEERS"						
FIELD ENG.PARTY CHIEF-BLDG,SITE,HVY/HWY *OPERATING ENGINEERS LOCAL 4*	05/01/2014	$40.29	$10.00	$14.18	$0.00	$64.47
For apprentice rates see "Apprentice- OPERATING ENGINEERS"						
FIELD ENG.ROD PERSON-BLDG,SITE,HVY/HWY *OPERATING ENGINEERS LOCAL 4*	05/01/2014	$20.92	$10.00	$14.18	$0.00	$45.10
For apprentice rates see "Apprentice- OPERATING ENGINEERS"						
FIRE ALARM INSTALLER *ELECTRICIANS LOCAL 103*	09/01/2014	$44.79	$13.00	$15.04	$0.00	$72.83
	03/01/2015	$45.17	$13.00	$15.40	$0.00	$73.57
	09/01/2015	$46.13	$13.00	$15.43	$0.00	$74.56
	03/01/2016	$47.08	$13.00	$15.46	$0.00	$75.54
For apprentice rates see "Apprentice- ELECTRICIAN"						
FIRE ALARM REPAIR / MAINTENANCE / COMMISSIONING*ELECTRICIANS LOCAL 103*	09/01/2014	$33.59	$13.00	$13.36	$0.00	$59.95
	03/01/2015	$33.88	$13.00	$13.70	$0.00	$60.58
	09/01/2015	$34.60	$13.00	$13.72	$0.00	$61.32
	03/01/2016	$35.31	$13.00	$13.74	$0.00	$62.05
For apprentice rates see "Apprentice- TELECOMMUNICATIONS TECHNICIAN"						

Classification	Effective Date	Base Wage	Health	Pension	Supplemental Unemployment	Total Rate
FIREMAN (ASST. ENGINEER) *OPERATING ENGINEERS LOCAL 4*	12/01/2014	$35.33	$10.00	$14.30	$0.00	$59.63
	06/01/2015	$35.95	$10.00	$14.30	$0.00	$60.25
	12/01/2015	$37.00	$10.00	$14.30	$0.00	$61.30
	06/01/2016	$37.62	$10.00	$14.30	$0.00	$61.92
	12/01/2016	$38.66	$10.00	$14.30	$0.00	$62.96
	06/01/2017	$39.50	$10.00	$14.30	$0.00	$63.80
	12/01/2017	$40.33	$10.00	$14.30	$0.00	$64.63
For apprentice rates see "Apprentice- OPERATING ENGINEERS"						
FLAGGER & SIGNALER *LABORERS - ZONE 1*	12/01/2014	$20.50	$7.30	$12.70	$0.00	$40.50
	06/01/2015	$20.50	$7.30	$12.70	$0.00	$40.50
	12/01/2015	$20.50	$7.30	$12.70	$0.00	$40.50
	06/01/2016	$20.50	$7.30	$12.70	$0.00	$40.50
	12/01/2016	$20.50	$7.30	$12.70	$0.00	$40.50
For apprentice rates see "Apprentice- LABORER"						
FLOORCOVERER *FLOORCOVERERS LOCAL 2168 ZONE I*	09/01/2014	$40.40	$9.80	$17.21	$0.00	$67.41

Apprentice - *FLOORCOVERER - Local 2168 Zone I*

Effective Date - 09/01/2014

Step	percent	Apprentice Base Wage	Health	Pension	Supplemental Unemployment	Total Rate
1	50	$20.20	$9.80	$1.79	$0.00	$31.79
2	55	$22.22	$9.80	$1.79	$0.00	$33.81
3	60	$24.24	$9.80	$11.84	$0.00	$45.88
4	65	$26.26	$9.80	$11.84	$0.00	$47.90
5	70	$28.28	$9.80	$13.63	$0.00	$51.71
6	75	$30.30	$9.80	$13.63	$0.00	$53.73
7	80	$32.32	$9.80	$15.42	$0.00	$57.54
8	85	$34.34	$9.80	$15.42	$0.00	$59.56

Notes:

Steps are 750 hrs.

Apprentice to Journeyworker Ratio:1:1

FORK LIFT/CHERRY PICKER *OPERATING ENGINEERS LOCAL 4*	12/01/2014	$42.39	$10.00	$14.30	$0.00	$66.69
	06/01/2015	$43.14	$10.00	$14.30	$0.00	$67.44
	12/01/2015	$44.39	$10.00	$14.30	$0.00	$68.69
	06/01/2016	$45.14	$10.00	$14.30	$0.00	$69.44
	12/01/2016	$46.39	$10.00	$14.30	$0.00	$70.69
	06/01/2017	$47.39	$10.00	$14.30	$0.00	$71.69
	12/01/2017	$48.39	$10.00	$14.30	$0.00	$72.69
For apprentice rates see "Apprentice- OPERATING ENGINEERS"						

Classification	Effective Date	Base Wage	Health	Pension	Supplemental Unemployment	Total Rate
GENERATOR/LIGHTING PLANT/HEATERS *OPERATING ENGINEERS LOCAL 4*	12/01/2014	$29.40	$10.00	$14.30	$0.00	$53.70
	06/01/2015	$29.92	$10.00	$14.30	$0.00	$54.22
	12/01/2015	$30.79	$10.00	$14.30	$0.00	$55.09
	06/01/2016	$31.31	$10.00	$14.30	$0.00	$55.61
	12/01/2016	$32.18	$10.00	$14.30	$0.00	$56.48
	06/01/2017	$32.87	$10.00	$14.30	$0.00	$57.17
	12/01/2017	$33.56	$10.00	$14.30	$0.00	$57.86
For apprentice rates see "Apprentice- OPERATING ENGINEERS"						
GLAZIER (GLASS PLANK/AIR BARRIER/INTERIOR SYSTEMS) *GLAZIERS LOCAL 35 (ZONE 1)*	07/01/2014	$42.05	$7.85	$16.10	$0.00	$66.00
	01/01/2015	$42.95	$7.85	$16.10	$0.00	$66.90
	07/01/2015	$43.85	$7.85	$16.10	$0.00	$67.80
	01/01/2016	$44.80	$7.85	$16.10	$0.00	$68.75
	07/01/2016	$45.75	$7.85	$16.10	$0.00	$69.70
	01/01/2017	$46.70	$7.85	$16.10	$0.00	$70.65

Apprentice - *GLAZIER - Local 35 Zone 1*

Effective Date - 07/01/2014

Step	percent	Apprentice Base Wage	Health	Pension	Supplemental Unemployment	Total Rate
1	50	$21.03	$7.85	$0.00	$0.00	$28.88
2	55	$23.13	$7.85	$3.66	$0.00	$34.64
3	60	$25.23	$7.85	$3.99	$0.00	$37.07
4	65	$27.33	$7.85	$4.32	$0.00	$39.50
5	70	$29.44	$7.85	$14.11	$0.00	$51.40
6	75	$31.54	$7.85	$14.44	$0.00	$53.83
7	80	$33.64	$7.85	$14.77	$0.00	$56.26
8	90	$37.85	$7.85	$15.44	$0.00	$61.14

Effective Date - 01/01/2015

Step	percent	Apprentice Base Wage	Health	Pension	Supplemental Unemployment	Total Rate
1	50	$21.48	$7.85	$0.00	$0.00	$29.33
2	55	$23.62	$7.85	$3.66	$0.00	$35.13
3	60	$25.77	$7.85	$3.99	$0.00	$37.61
4	65	$27.92	$7.85	$4.32	$0.00	$40.09
5	70	$30.07	$7.85	$14.11	$0.00	$52.03
6	75	$32.21	$7.85	$14.44	$0.00	$54.50
7	80	$34.36	$7.85	$14.77	$0.00	$56.98
8	90	$38.66	$7.85	$15.44	$0.00	$61.95

Notes:

Steps are 750 hrs.

Apprentice to Journeyworker Ratio:1:1

Classification	Effective Date	Base Wage	Health	Pension	Supplemental Unemployment	Total Rate
HOISTING ENGINEER/CRANES/GRADALLS *OPERATING ENGINEERS LOCAL 4*	12/01/2014	$42.39	$10.00	$14.30	$0.00	$66.69
	06/01/2015	$43.14	$10.00	$14.30	$0.00	$67.44
	12/01/2015	$44.39	$10.00	$14.30	$0.00	$68.69
	06/01/2016	$45.14	$10.00	$14.30	$0.00	$69.44
	12/01/2016	$46.39	$10.00	$14.30	$0.00	$70.69
	06/01/2017	$47.39	$10.00	$14.30	$0.00	$71.69
	12/01/2017	$48.39	$10.00	$14.30	$0.00	$72.69

Apprentice - *OPERATING ENGINEERS - Local 4*

Effective Date - 12/01/2014

Step	percent	Apprentice Base Wage	Health	Pension	Supplemental Unemployment	Total Rate
1	55	$23.31	$10.00	$0.00	$0.00	$33.31
2	60	$25.43	$10.00	$14.30	$0.00	$49.73
3	65	$27.55	$10.00	$14.30	$0.00	$51.85
4	70	$29.67	$10.00	$14.30	$0.00	$53.97
5	75	$31.79	$10.00	$14.30	$0.00	$56.09
6	80	$33.91	$10.00	$14.30	$0.00	$58.21
7	85	$36.03	$10.00	$14.30	$0.00	$60.33
8	90	$38.15	$10.00	$14.30	$0.00	$62.45

Effective Date - 06/01/2015

Step	percent	Apprentice Base Wage	Health	Pension	Supplemental Unemployment	Total Rate
1	55	$23.73	$10.00	$0.00	$0.00	$33.73
2	60	$25.88	$10.00	$14.30	$0.00	$50.18
3	65	$28.04	$10.00	$14.30	$0.00	$52.34
4	70	$30.20	$10.00	$14.30	$0.00	$54.50
5	75	$32.36	$10.00	$14.30	$0.00	$56.66
6	80	$34.51	$10.00	$14.30	$0.00	$58.81
7	85	$36.67	$10.00	$14.30	$0.00	$60.97
8	90	$38.83	$10.00	$14.30	$0.00	$63.13

Notes:

Apprentice to Journeyworker Ratio:1:6

HVAC (DUCTWORK) *SHEETMETAL WORKERS LOCAL 17 - A*	08/01/2014	$42.79	$9.82	$20.54	$2.19	$75.34
	02/01/2015	$43.69	$9.82	$20.54	$2.19	$76.24
	08/01/2015	$44.69	$9.82	$20.54	$2.19	$77.24
	02/01/2016	$45.69	$9.82	$20.54	$2.19	$78.24
	08/01/2016	$46.84	$9.82	$20.54	$2.19	$79.39
	02/01/2017	$47.94	$9.82	$20.54	$2.19	$80.49
	08/01/2017	$49.04	$9.82	$20.54	$2.19	$81.59
	02/01/2018	$50.19	$9.82	$20.54	$2.19	$82.74

For apprentice rates see "Apprentice- SHEET METAL WORKER"

Classification	Effective Date	Base Wage	Health	Pension	Supplemental Unemployment	Total Rate
HVAC (ELECTRICAL CONTROLS) *ELECTRICIANS LOCAL 103*	09/01/2014	$44.79	$13.00	$15.04	$0.00	$72.83
	03/01/2015	$45.17	$13.00	$15.40	$0.00	$73.57
	09/01/2015	$46.13	$13.00	$15.43	$0.00	$74.56
	03/01/2016	$47.08	$13.00	$15.46	$0.00	$75.54
For apprentice rates see "Apprentice- ELECTRICIAN"						
HVAC (TESTING AND BALANCING - AIR) *SHEETMETAL WORKERS LOCAL 17 - A*	08/01/2014	$42.79	$9.82	$20.54	$2.19	$75.34
	02/01/2015	$43.69	$9.82	$20.54	$2.19	$76.24
	08/01/2015	$44.69	$9.82	$20.54	$2.19	$77.24
	02/01/2016	$45.69	$9.82	$20.54	$2.19	$78.24
	08/01/2016	$46.84	$9.82	$20.54	$2.19	$79.39
	02/01/2017	$47.94	$9.82	$20.54	$2.19	$80.49
	08/01/2017	$49.04	$9.82	$20.54	$2.19	$81.59
	02/01/2018	$50.19	$9.82	$20.54	$2.19	$82.74
For apprentice rates see "Apprentice- SHEET METAL WORKER"						
HVAC (TESTING AND BALANCING -WATER) *PIPEFITTERS LOCAL 537*	09/01/2014	$48.69	$9.20	$16.64	$0.00	$74.53
	03/01/2015	$49.69	$9.20	$16.64	$0.00	$75.53
	09/01/2015	$50.69	$9.20	$16.64	$0.00	$76.53
	03/01/2016	$51.69	$9.20	$16.64	$0.00	$77.53
	09/01/2016	$52.69	$9.20	$16.64	$0.00	$78.53
	03/01/2017	$53.69	$9.20	$16.64	$0.00	$79.53
For apprentice rates see "Apprentice- PIPEFITTER" or "PLUMBER/PIPEFITTER"						
HVAC MECHANIC *PIPEFITTERS LOCAL 537*	09/01/2014	$48.69	$9.20	$16.64	$0.00	$74.53
	03/01/2015	$49.69	$9.20	$16.64	$0.00	$75.53
	09/01/2015	$50.69	$9.20	$16.64	$0.00	$76.53
	03/01/2016	$51.69	$9.20	$16.64	$0.00	$77.53
	09/01/2016	$52.69	$9.20	$16.64	$0.00	$78.53
	03/01/2017	$53.69	$9.20	$16.64	$0.00	$79.53
For apprentice rates see "Apprentice- PIPEFITTER" or "PLUMBER/PIPEFITTER"						
HYDRAULIC DRILLS *LABORERS - ZONE 1*	12/01/2014	$35.60	$7.30	$12.70	$0.00	$55.60
	06/01/2015	$36.35	$7.30	$12.70	$0.00	$56.35
	12/01/2015	$37.10	$7.30	$12.70	$0.00	$57.10
	06/01/2016	$37.85	$7.30	$12.70	$0.00	$57.85
	12/01/2016	$38.85	$7.30	$12.70	$0.00	$58.85
For apprentice rates see "Apprentice- LABORER"						
INSULATOR (PIPES & TANKS) *HEAT & FROST INSULATORS LOCAL 6 (BOSTON)*	09/01/2014	$43.31	$11.25	$12.60	$0.00	$67.16

Classification	Effective Date	Base Wage	Health	Pension	Supplemental Unemployment	Total Rate

Apprentice - *ASBESTOS INSULATOR (Pipes & Tanks) - Local 6 Boston*

Effective Date - 09/01/2014

Step	percent	Apprentice Base Wage	Health	Pension	Supplemental Unemployment	Total Rate
1	50	$21.66	$11.25	$9.35	$0.00	$42.26
2	60	$25.99	$11.25	$10.00	$0.00	$47.24
3	70	$30.32	$11.25	$10.65	$0.00	$52.22
4	80	$34.65	$11.25	$11.30	$0.00	$57.20

Notes:
Steps are 1 year

Apprentice to Journeyworker Ratio:1:4

IRONWORKER/WELDER *IRONWORKERS LOCAL 7 (BOSTON AREA)*	03/16/2014	$41.19	$7.70	$19.25	$0.00	$68.14

Apprentice - *IRONWORKER - Local 7 Boston*

Effective Date - 03/16/2014

Step	percent	Apprentice Base Wage	Health	Pension	Supplemental Unemployment	Total Rate
1	60	$24.71	$7.70	$19.25	$0.00	$51.66
2	70	$28.83	$7.70	$19.25	$0.00	$55.78
3	75	$30.89	$7.70	$19.25	$0.00	$57.84
4	80	$32.95	$7.70	$19.25	$0.00	$59.90
5	85	$35.01	$7.70	$19.25	$0.00	$61.96
6	90	$37.07	$7.70	$19.25	$0.00	$64.02

Notes:
** Structural 1:6; Ornamental 1:4

Apprentice to Journeyworker Ratio:**

JACKHAMMER & PAVING BREAKER OPERATOR *LABORERS - ZONE 1*	12/01/2014	$35.10	$7.30	$12.70	$0.00	$55.10
	06/01/2015	$35.85	$7.30	$12.70	$0.00	$55.85
	12/01/2015	$36.60	$7.30	$12.70	$0.00	$56.60
	06/01/2016	$37.35	$7.30	$12.70	$0.00	$57.35
	12/01/2016	$38.35	$7.30	$12.70	$0.00	$58.35

For apprentice rates see "Apprentice- LABORER"

LABORER *LABORERS - ZONE 1*	12/01/2014	$34.85	$7.30	$12.70	$0.00	$54.85
	06/01/2015	$35.60	$7.30	$12.70	$0.00	$55.60
	12/01/2015	$36.35	$7.30	$12.70	$0.00	$56.35
	06/01/2016	$37.10	$7.30	$12.70	$0.00	$57.10
	12/01/2016	$38.10	$7.30	$12.70	$0.00	$58.10

Classification	Effective Date	Base Wage	Health	Pension	Supplemental Unemployment	Total Rate

Apprentice - *LABORER - Zone 1*

Effective Date - 12/01/2014

Step	percent	Apprentice Base Wage	Health	Pension	Supplemental Unemployment	Total Rate
1	60	$20.91	$7.30	$12.70	$0.00	$40.91
2	70	$24.40	$7.30	$12.70	$0.00	$44.40
3	80	$27.88	$7.30	$12.70	$0.00	$47.88
4	90	$31.37	$7.30	$12.70	$0.00	$51.37

Effective Date - 06/01/2015

Step	percent	Apprentice Base Wage	Health	Pension	Supplemental Unemployment	Total Rate
1	60	$21.36	$7.30	$12.70	$0.00	$41.36
2	70	$24.92	$7.30	$12.70	$0.00	$44.92
3	80	$28.48	$7.30	$12.70	$0.00	$48.48
4	90	$32.04	$7.30	$12.70	$0.00	$52.04

Notes:

Apprentice to Journeyworker Ratio:1:5

LABORER: CARPENTER TENDER *LABORERS - ZONE 1*	12/01/2014	$34.85	$7.30	$12.70	$0.00	$54.85
	06/01/2015	$35.60	$7.30	$12.70	$0.00	$55.60
	12/01/2015	$36.35	$7.30	$12.70	$0.00	$56.35
	06/01/2016	$37.10	$7.30	$12.70	$0.00	$57.10
	12/01/2016	$38.10	$7.30	$12.70	$0.00	$58.10
For apprentice rates see "Apprentice- LABORER"						
LABORER: CEMENT FINISHER TENDER *LABORERS - ZONE 1*	12/01/2014	$34.85	$7.30	$12.70	$0.00	$54.85
	06/01/2015	$35.60	$7.30	$12.70	$0.00	$55.60
	12/01/2015	$36.35	$7.30	$12.70	$0.00	$56.35
	06/01/2016	$37.10	$7.30	$12.70	$0.00	$57.10
	12/01/2016	$38.10	$7.30	$12.70	$0.00	$58.10
For apprentice rates see "Apprentice- LABORER"						
LABORER: HAZARDOUS WASTE/ASBESTOS REMOVER *LABORERS - ZONE 1*	12/01/2014	$35.00	$7.30	$12.70	$0.00	$55.00
	06/01/2015	$35.75	$7.30	$12.70	$0.00	$55.75
	12/01/2015	$36.50	$7.30	$12.70	$0.00	$56.50
For apprentice rates see "Apprentice- LABORER"						
LABORER: MASON TENDER *LABORERS - ZONE 1*	12/01/2014	$35.10	$7.30	$12.70	$0.00	$55.10
	06/01/2015	$35.85	$7.30	$12.70	$0.00	$55.85
	12/01/2015	$36.60	$7.30	$12.70	$0.00	$56.60
	06/01/2016	$37.35	$7.30	$12.70	$0.00	$57.35
	12/01/2016	$38.35	$7.30	$12.70	$0.00	$58.35
For apprentice rates see "Apprentice- LABORER"						
LABORER: MULTI-TRADE TENDER *LABORERS - ZONE 1*	12/01/2014	$34.85	$7.30	$12.70	$0.00	$54.85
	06/01/2015	$35.60	$7.30	$12.70	$0.00	$55.60
	12/01/2015	$36.35	$7.30	$12.70	$0.00	$56.35
	06/01/2016	$37.10	$7.30	$12.70	$0.00	$57.10
	12/01/2016	$38.10	$7.30	$12.70	$0.00	$58.10

Classification	Effective Date	Base Wage	Health	Pension	Supplemental Unemployment	Total Rate
For apprentice rates see "Apprentice- LABORER"						
LABORER: TREE REMOVER *LABORERS - ZONE 1*	12/01/2014	$34.85	$7.30	$12.70	$0.00	$54.85
	06/01/2015	$35.60	$7.30	$12.70	$0.00	$55.60
	12/01/2015	$36.35	$7.30	$12.70	$0.00	$56.35
	06/01/2016	$37.10	$7.30	$12.70	$0.00	$57.10
	12/01/2016	$38.10	$7.30	$12.70	$0.00	$58.10
This classification applies to all tree work associated with the removal of standing trees, and trimming and removal of branches and limbs when the work is not done for a utility company for the purpose of operation, maintenance or repair of utility company equipment. For apprentice rates see "Apprentice- LABORER"						
LASER BEAM OPERATOR *LABORERS - ZONE 1*	12/01/2014	$35.10	$7.30	$12.70	$0.00	$55.10
	06/01/2015	$35.85	$7.30	$12.70	$0.00	$55.85
	12/01/2015	$36.60	$7.30	$12.70	$0.00	$56.60
	06/01/2016	$37.35	$7.30	$12.70	$0.00	$57.35
	12/01/2016	$38.35	$7.30	$12.70	$0.00	$58.35
For apprentice rates see "Apprentice- LABORER"						
MARBLE & TILE FINISHERS *BRICKLAYERS LOCAL 3 - MARBLE & TILE*	08/01/2014	$37.37	$10.18	$16.90	$0.00	$64.45
	02/01/2015	$37.82	$10.18	$16.90	$0.00	$64.90
	08/01/2015	$38.53	$10.18	$16.97	$0.00	$65.68
	02/01/2016	$38.98	$10.18	$16.97	$0.00	$66.13
	08/01/2016	$39.68	$10.18	$17.05	$0.00	$66.91
	02/01/2017	$40.14	$10.18	$17.05	$0.00	$67.37

Apprentice - *MARBLE & TILE FINISHER - Local 3 Marble & Tile*

Effective Date - 08/01/2014

Step	percent	Apprentice Base Wage	Health	Pension	Supplemental Unemployment	Total Rate
1	50	$18.69	$10.18	$16.90	$0.00	$45.77
2	60	$22.42	$10.18	$16.90	$0.00	$49.50
3	70	$26.16	$10.18	$16.90	$0.00	$53.24
4	80	$29.90	$10.18	$16.90	$0.00	$56.98
5	90	$33.63	$10.18	$16.90	$0.00	$60.71

Effective Date - 02/01/2015

Step	percent	Apprentice Base Wage	Health	Pension	Supplemental Unemployment	Total Rate
1	50	$18.91	$10.18	$16.90	$0.00	$45.99
2	60	$22.69	$10.18	$16.90	$0.00	$49.77
3	70	$26.47	$10.18	$16.90	$0.00	$53.55
4	80	$30.26	$10.18	$16.90	$0.00	$57.34
5	90	$34.04	$10.18	$16.90	$0.00	$61.12

Notes:

Apprentice to Journeyworker Ratio:1:3

Classification	Effective Date	Base Wage	Health	Pension	Supplemental Unemployment	Total Rate
MARBLE MASONS,TILELAYERS & TERRAZZO MECH *BRICKLAYERS LOCAL 3 - MARBLE & TILE*	08/01/2014	$49.00	$10.18	$18.22	$0.00	$77.40
	02/01/2015	$49.56	$10.18	$18.22	$0.00	$77.96
	08/01/2015	$50.46	$10.18	$18.29	$0.00	$78.93
	02/01/2016	$51.03	$10.18	$18.29	$0.00	$79.50
	08/01/2016	$51.93	$10.18	$18.37	$0.00	$80.48
	02/01/2017	$52.50	$10.18	$18.37	$0.00	$81.05

Apprentice - *MARBLE-TILE-TERRAZZO MECHANIC - Local 3 Marble & Tile*

Effective Date - 08/01/2014

Step	percent	Apprentice Base Wage	Health	Pension	Supplemental Unemployment	Total Rate
1	50	$24.50	$10.18	$18.22	$0.00	$52.90
2	60	$29.40	$10.18	$18.22	$0.00	$57.80
3	70	$34.30	$10.18	$18.22	$0.00	$62.70
4	80	$39.20	$10.18	$18.22	$0.00	$67.60
5	90	$44.10	$10.18	$18.22	$0.00	$72.50

Effective Date - 02/01/2015

Step	percent	Apprentice Base Wage	Health	Pension	Supplemental Unemployment	Total Rate
1	50	$24.78	$10.18	$18.22	$0.00	$53.18
2	60	$29.74	$10.18	$18.22	$0.00	$58.14
3	70	$34.69	$10.18	$18.22	$0.00	$63.09
4	80	$39.65	$10.18	$18.22	$0.00	$68.05
5	90	$44.60	$10.18	$18.22	$0.00	$73.00

Notes:

Apprentice to Journeyworker Ratio:1:5

MECH. SWEEPER OPERATOR (ON CONST. SITES) *OPERATING ENGINEERS LOCAL 4*	12/01/2014	$41.99	$10.00	$14.30	$0.00	$66.29
	06/01/2015	$42.73	$10.00	$14.30	$0.00	$67.03
	12/01/2015	$43.97	$10.00	$14.30	$0.00	$68.27
	06/01/2016	$44.72	$10.00	$14.30	$0.00	$69.02
	12/01/2016	$45.95	$10.00	$14.30	$0.00	$70.25
	06/01/2017	$46.94	$10.00	$14.30	$0.00	$71.24
	12/01/2017	$47.93	$10.00	$14.30	$0.00	$72.23

For apprentice rates see "Apprentice- OPERATING ENGINEERS"

MECHANICS MAINTENANCE *OPERATING ENGINEERS LOCAL 4*	12/01/2014	$41.99	$10.00	$14.30	$0.00	$66.29
	06/01/2015	$42.73	$10.00	$14.30	$0.00	$67.03
	12/01/2015	$43.97	$10.00	$14.30	$0.00	$68.27
	06/01/2016	$44.72	$10.00	$14.30	$0.00	$69.02
	12/01/2016	$45.95	$10.00	$14.30	$0.00	$70.25
	06/01/2017	$46.94	$10.00	$14.30	$0.00	$71.24
	12/01/2017	$47.93	$10.00	$14.30	$0.00	$72.23

For apprentice rates see "Apprentice- OPERATING ENGINEERS"

MILLWRIGHT (Zone 1) *MILLWRIGHTS LOCAL 1121 - Zone 1*	10/01/2014	$36.68	$9.80	$16.21	$0.00	$62.69
	04/01/2015	$37.64	$9.80	$16.21	$0.00	$63.65

Classification	Effective Date	Base Wage	Health	Pension	Supplemental Unemployment	Total Rate

Apprentice - *MILLWRIGHT - Local 1121 Zone 1*

Effective Date - 10/01/2014

Step	percent	Apprentice Base Wage	Health	Pension	Supplemental Unemployment	Total Rate
1	55	$20.17	$9.80	$4.48	$0.00	$34.45
2	65	$23.84	$9.80	$13.36	$0.00	$47.00
3	75	$27.51	$9.80	$14.18	$0.00	$51.49
4	85	$31.18	$9.80	$14.99	$0.00	$55.97

Effective Date - 04/01/2015

Step	percent	Apprentice Base Wage	Health	Pension	Supplemental Unemployment	Total Rate
1	55	$20.70	$9.80	$4.48	$0.00	$34.98
2	65	$24.47	$9.80	$13.36	$0.00	$47.63
3	75	$28.23	$9.80	$14.18	$0.00	$52.21
4	85	$31.99	$9.80	$14.99	$0.00	$56.78

Notes:

Steps are 2,000 hours

Apprentice to Journeyworker Ratio:1:5

MORTAR MIXER *LABORERS - ZONE 1*	12/01/2014	$35.10	$7.30	$12.70	$0.00	$55.10
	06/01/2015	$35.85	$7.30	$12.70	$0.00	$55.85
	12/01/2015	$36.60	$7.30	$12.70	$0.00	$56.60
	06/01/2016	$37.35	$7.30	$12.70	$0.00	$57.35
	12/01/2016	$38.35	$7.30	$12.70	$0.00	$58.35
For apprentice rates see "Apprentice- LABORER"						
OILER (OTHER THAN TRUCK CRANES,GRADALLS) *OPERATING ENGINEERS LOCAL 4*	12/01/2014	$21.90	$10.00	$14.30	$0.00	$46.20
	06/01/2015	$22.28	$10.00	$14.30	$0.00	$46.58
	12/01/2015	$22.93	$10.00	$14.30	$0.00	$47.23
	06/01/2016	$23.32	$10.00	$14.30	$0.00	$47.62
	12/01/2016	$23.97	$10.00	$14.30	$0.00	$48.27
	06/01/2017	$24.48	$10.00	$14.30	$0.00	$48.78
	12/01/2017	$25.00	$10.00	$14.30	$0.00	$49.30
For apprentice rates see "Apprentice- OPERATING ENGINEERS"						
OILER (TRUCK CRANES, GRADALLS) *OPERATING ENGINEERS LOCAL 4*	12/01/2014	$25.54	$10.00	$14.30	$0.00	$49.84
	06/01/2015	$25.99	$10.00	$14.30	$0.00	$50.29
	12/01/2015	$26.74	$10.00	$14.30	$0.00	$51.04
	06/01/2016	$27.20	$10.00	$14.30	$0.00	$51.50
	12/01/2016	$27.95	$10.00	$14.30	$0.00	$52.25
	06/01/2017	$28.55	$10.00	$14.30	$0.00	$52.85
	12/01/2017	$29.16	$10.00	$14.30	$0.00	$53.46
For apprentice rates see "Apprentice- OPERATING ENGINEERS"						

Classification	Effective Date	Base Wage	Health	Pension	Supplemental Unemployment	Total Rate
OTHER POWER DRIVEN EQUIPMENT - CLASS II *OPERATING ENGINEERS LOCAL 4*	12/01/2014	$41.99	$10.00	$14.30	$0.00	$66.29
	06/01/2015	$42.73	$10.00	$14.30	$0.00	$67.03
	12/01/2015	$43.97	$10.00	$14.30	$0.00	$68.27
	06/01/2016	$44.72	$10.00	$14.30	$0.00	$69.02
	12/01/2016	$45.95	$10.00	$14.30	$0.00	$70.25
	06/01/2017	$46.94	$10.00	$14.30	$0.00	$71.24
	12/01/2017	$47.93	$10.00	$14.30	$0.00	$72.23
For apprentice rates see "Apprentice- OPERATING ENGINEERS"						
PAINTER (BRIDGES/TANKS) *PAINTERS LOCAL 35 - ZONE 1*	07/01/2014	$46.76	$7.85	$16.10	$0.00	$70.71
	01/01/2015	$47.66	$7.85	$16.10	$0.00	$71.61
	07/01/2015	$48.56	$7.85	$16.10	$0.00	$72.51
	01/01/2016	$49.51	$7.85	$16.10	$0.00	$73.46
	07/01/2016	$50.46	$7.85	$16.10	$0.00	$74.41
	01/01/2017	$51.41	$7.85	$16.10	$0.00	$75.36

Apprentice - *PAINTER Local 35 - BRIDGES/TANKS*

Effective Date - 07/01/2014

Step	percent	Apprentice Base Wage	Health	Pension	Supplemental Unemployment	Total Rate
1	50	$23.38	$7.85	$0.00	$0.00	$31.23
2	55	$25.72	$7.85	$3.66	$0.00	$37.23
3	60	$28.06	$7.85	$3.99	$0.00	$39.90
4	65	$30.39	$7.85	$4.32	$0.00	$42.56
5	70	$32.73	$7.85	$14.11	$0.00	$54.69
6	75	$35.07	$7.85	$14.44	$0.00	$57.36
7	80	$37.41	$7.85	$14.77	$0.00	$60.03
8	90	$42.08	$7.85	$15.44	$0.00	$65.37

Effective Date - 01/01/2015

Step	percent	Apprentice Base Wage	Health	Pension	Supplemental Unemployment	Total Rate
1	50	$23.83	$7.85	$0.00	$0.00	$31.68
2	55	$26.21	$7.85	$3.66	$0.00	$37.72
3	60	$28.60	$7.85	$3.99	$0.00	$40.44
4	65	$30.98	$7.85	$4.32	$0.00	$43.15
5	70	$33.36	$7.85	$14.11	$0.00	$55.32
6	75	$35.75	$7.85	$14.44	$0.00	$58.04
7	80	$38.13	$7.85	$14.77	$0.00	$60.75
8	90	$42.89	$7.85	$15.44	$0.00	$66.18

Notes:

Steps are 750 hrs.

Apprentice to Journeyworker Ratio:1:1

Classification	Effective Date	Base Wage	Health	Pension	Supplemental Unemployment	Total Rate
PAINTER (SPRAY OR SANDBLAST, NEW) *	07/01/2014	$43.45	$7.85	$16.10	$0.00	$67.40
* If 30% or more of surfaces to be painted are new construction, NEW paint rate shall be used.*PAINTERS LOCAL 35 - ZONE 1*	01/01/2015	$44.35	$7.85	$16.10	$0.00	$68.30
	07/01/2015	$45.25	$7.85	$16.10	$0.00	$69.20
	01/01/2016	$46.20	$7.85	$16.10	$0.00	$70.15
	07/01/2016	$47.15	$7.85	$16.10	$0.00	$71.10
	01/01/2017	$48.10	$7.85	$16.10	$0.00	$72.05

Apprentice - *PAINTER Local 35 Zone 1 - Spray/Sandblast - New*

Effective Date - 07/01/2014

Step	percent	Apprentice Base Wage	Health	Pension	Supplemental Unemployment	Total Rate
1	50	$21.73	$7.85	$0.00	$0.00	$29.58
2	55	$23.90	$7.85	$3.66	$0.00	$35.41
3	60	$26.07	$7.85	$3.99	$0.00	$37.91
4	65	$28.24	$7.85	$4.32	$0.00	$40.41
5	70	$30.42	$7.85	$14.11	$0.00	$52.38
6	75	$32.59	$7.85	$14.44	$0.00	$54.88
7	80	$34.76	$7.85	$14.77	$0.00	$57.38
8	90	$39.11	$7.85	$15.44	$0.00	$62.40

Effective Date - 01/01/2015

Step	percent	Apprentice Base Wage	Health	Pension	Supplemental Unemployment	Total Rate
1	50	$22.18	$7.85	$0.00	$0.00	$30.03
2	55	$24.39	$7.85	$3.66	$0.00	$35.90
3	60	$26.61	$7.85	$3.99	$0.00	$38.45
4	65	$28.83	$7.85	$4.32	$0.00	$41.00
5	70	$31.05	$7.85	$14.11	$0.00	$53.01
6	75	$33.26	$7.85	$14.44	$0.00	$55.55
7	80	$35.48	$7.85	$14.77	$0.00	$58.10
8	90	$39.92	$7.85	$15.44	$0.00	$63.21

Notes:

Steps are 750 hrs.

Apprentice to Journeyworker Ratio:1:1

PAINTER (SPRAY OR SANDBLAST, REPAINT) *PAINTERS LOCAL 35 - ZONE 1*	07/01/2014	$41.51	$7.85	$16.10	$0.00	$65.46
	01/01/2015	$42.41	$7.85	$16.10	$0.00	$66.36
	07/01/2015	$43.31	$7.85	$16.10	$0.00	$67.26
	01/01/2016	$44.26	$7.85	$16.10	$0.00	$68.21
	07/01/2016	$45.21	$7.85	$16.10	$0.00	$69.16
	01/01/2017	$46.16	$7.85	$16.10	$0.00	$70.11

Classification	Effective Date	Base Wage	Health	Pension	Supplemental Unemployment	Total Rate

Apprentice - *PAINTER Local 35 Zone 1 - Spray/Sandblast - Repaint*

Effective Date - 07/01/2014

Step	percent	Apprentice Base Wage	Health	Pension	Supplemental Unemployment	Total Rate
1	50	$20.76	$7.85	$0.00	$0.00	$28.61
2	55	$22.83	$7.85	$3.66	$0.00	$34.34
3	60	$24.91	$7.85	$3.99	$0.00	$36.75
4	65	$26.98	$7.85	$4.32	$0.00	$39.15
5	70	$29.06	$7.85	$14.11	$0.00	$51.02
6	75	$31.13	$7.85	$14.44	$0.00	$53.42
7	80	$33.21	$7.85	$14.77	$0.00	$55.83
8	90	$37.36	$7.85	$15.44	$0.00	$60.65

Effective Date - 01/01/2015

Step	percent	Apprentice Base Wage	Health	Pension	Supplemental Unemployment	Total Rate
1	50	$21.21	$7.85	$0.00	$0.00	$29.06
2	55	$23.33	$7.85	$3.66	$0.00	$34.84
3	60	$25.45	$7.85	$3.99	$0.00	$37.29
4	65	$27.57	$7.85	$4.32	$0.00	$39.74
5	70	$29.69	$7.85	$14.11	$0.00	$51.65
6	75	$31.81	$7.85	$14.44	$0.00	$54.10
7	80	$33.93	$7.85	$14.77	$0.00	$56.55
8	90	$38.17	$7.85	$15.44	$0.00	$61.46

Notes:

Steps are 750 hrs.

Apprentice to Journeyworker Ratio:1:1

PAINTER (TRAFFIC MARKINGS) *LABORERS - ZONE 1*	12/01/2014	$34.85	$7.30	$12.70	$0.00	$54.85
	06/01/2015	$35.60	$7.30	$12.70	$0.00	$55.60
	12/01/2015	$36.35	$7.30	$12.70	$0.00	$56.35
	06/01/2016	$37.10	$7.30	$12.70	$0.00	$57.10
	12/01/2016	$38.10	$7.30	$12.70	$0.00	$58.10
For Apprentice rates see "Apprentice- LABORER"						
PAINTER / TAPER (BRUSH, NEW) * * If 30% or more of surfaces to be painted are new construction, NEW paint rate shall be used.*PAINTERS LOCAL 35 - ZONE 1*	07/01/2014	$42.05	$7.85	$16.10	$0.00	$66.00
	01/01/2015	$42.95	$7.85	$16.10	$0.00	$66.90
	07/01/2015	$43.85	$7.85	$16.10	$0.00	$67.80
	01/01/2016	$44.80	$7.85	$16.10	$0.00	$68.75
	07/01/2016	$45.75	$7.85	$16.10	$0.00	$69.70
	01/01/2017	$46.70	$7.85	$16.10	$0.00	$70.65

Classification	Effective Date	Base Wage	Health	Pension	Supplemental Unemployment	Total Rate

Apprentice - *PAINTER - Local 35 Zone 1 - BRUSH NEW*

Effective Date - 07/01/2014

Step	percent	Apprentice Base Wage	Health	Pension	Supplemental Unemployment	Total Rate
1	50	$21.03	$7.85	$0.00	$0.00	$28.88
2	55	$23.13	$7.85	$3.66	$0.00	$34.64
3	60	$25.23	$7.85	$3.99	$0.00	$37.07
4	65	$27.33	$7.85	$4.32	$0.00	$39.50
5	70	$29.44	$7.85	$14.11	$0.00	$51.40
6	75	$31.54	$7.85	$14.44	$0.00	$53.83
7	80	$33.64	$7.85	$14.77	$0.00	$56.26
8	90	$37.85	$7.85	$15.44	$0.00	$61.14

Effective Date - 01/01/2015

Step	percent	Apprentice Base Wage	Health	Pension	Supplemental Unemployment	Total Rate
1	50	$21.48	$7.85	$0.00	$0.00	$29.33
2	55	$23.62	$7.85	$3.66	$0.00	$35.13
3	60	$25.77	$7.85	$3.99	$0.00	$37.61
4	65	$27.92	$7.85	$4.32	$0.00	$40.09
5	70	$30.07	$7.85	$14.11	$0.00	$52.03
6	75	$32.21	$7.85	$14.44	$0.00	$54.50
7	80	$34.36	$7.85	$14.77	$0.00	$56.98
8	90	$38.66	$7.85	$15.44	$0.00	$61.95

Notes:

Steps are 750 hrs.

Apprentice to Journeyworker Ratio:1:1

PAINTER / TAPER (BRUSH, REPAINT) *PAINTERS LOCAL 35 - ZONE 1*	07/01/2014	$40.11	$7.85	$16.10	$0.00	$64.06
	01/01/2015	$41.01	$7.85	$16.10	$0.00	$64.96
	07/01/2015	$41.91	$7.85	$16.10	$0.00	$65.86
	01/01/2016	$42.86	$7.85	$16.10	$0.00	$66.81
	07/01/2016	$43.81	$7.85	$16.10	$0.00	$67.76
	01/01/2017	$44.76	$7.85	$16.10	$0.00	$68.71

Classification	Effective Date	Base Wage	Health	Pension	Supplemental Unemployment	Total Rate

Apprentice - *PAINTER Local 35 Zone 1 - BRUSH REPAINT*

Effective Date - 07/01/2014

Step	percent	Apprentice Base Wage	Health	Pension	Supplemental Unemployment	Total Rate
1	50	$20.06	$7.85	$0.00	$0.00	$27.91
2	55	$22.06	$7.85	$3.66	$0.00	$33.57
3	60	$24.07	$7.85	$3.99	$0.00	$35.91
4	65	$26.07	$7.85	$4.32	$0.00	$38.24
5	70	$28.08	$7.85	$14.11	$0.00	$50.04
6	75	$30.08	$7.85	$14.44	$0.00	$52.37
7	80	$32.09	$7.85	$14.77	$0.00	$54.71
8	90	$36.10	$7.85	$15.44	$0.00	$59.39

Effective Date - 01/01/2015

Step	percent	Apprentice Base Wage	Health	Pension	Supplemental Unemployment	Total Rate
1	50	$20.51	$7.85	$0.00	$0.00	$28.36
2	55	$22.56	$7.85	$3.66	$0.00	$34.07
3	60	$24.61	$7.85	$3.99	$0.00	$36.45
4	65	$26.66	$7.85	$4.32	$0.00	$38.83
5	70	$28.71	$7.85	$14.11	$0.00	$50.67
6	75	$30.76	$7.85	$14.44	$0.00	$53.05
7	80	$32.81	$7.85	$14.77	$0.00	$55.43
8	90	$36.91	$7.85	$15.44	$0.00	$60.20

Notes:

Steps are 750 hrs.

Apprentice to Journeyworker Ratio:1:1

PANEL & PICKUP TRUCKS DRIVER *TEAMSTERS JOINT COUNCIL NO. 10 ZONE A*	12/01/2014	$32.23	$9.91	$9.33	$0.00	$51.47
	06/01/2015	$32.58	$9.91	$9.33	$0.00	$51.82
	08/01/2015	$32.58	$10.41	$9.33	$0.00	$52.32
	12/01/2015	$32.58	$10.41	$10.08	$0.00	$53.07
	06/01/2016	$33.08	$10.41	$10.08	$0.00	$53.57
	08/01/2016	$33.08	$10.91	$10.08	$0.00	$54.07
	12/01/2016	$33.08	$10.91	$10.89	$0.00	$54.88
PIER AND DOCK CONSTRUCTOR (UNDERPINNING AND DECK) *PILE DRIVER LOCAL 56 (ZONE 1)*	08/01/2014	$41.60	$9.80	$18.17	$0.00	$69.57
	08/01/2015	$43.10	$9.80	$18.17	$0.00	$71.07
PILE DRIVER *PILE DRIVER LOCAL 56 (ZONE 1)*	08/01/2014	$41.60	$9.80	$18.17	$0.00	$69.57
	08/01/2015	$43.10	$9.80	$18.17	$0.00	$71.07

Classification	Effective Date	Base Wage	Health	Pension	Supplemental Unemployment	Total Rate

Apprentice - *PILE DRIVER - Local 56 Zone 1*

Effective Date - 08/01/2014

Step	percent	Apprentice Base Wage	Health	Pension	Supplemental Unemployment	Total Rate
1	50	$20.80	$9.80	$18.17	$0.00	$48.77
2	60	$24.96	$9.80	$18.17	$0.00	$52.93
3	70	$29.12	$9.80	$18.17	$0.00	$57.09
4	75	$31.20	$9.80	$18.17	$0.00	$59.17
5	80	$33.28	$9.80	$18.17	$0.00	$61.25
6	80	$33.28	$9.80	$18.17	$0.00	$61.25
7	90	$37.44	$9.80	$18.17	$0.00	$65.41
8	90	$37.44	$9.80	$18.17	$0.00	$65.41

Effective Date - 08/01/2015

Step	percent	Apprentice Base Wage	Health	Pension	Supplemental Unemployment	Total Rate
1	50	$21.55	$9.80	$18.17	$0.00	$49.52
2	60	$25.86	$9.80	$18.17	$0.00	$53.83
3	70	$30.17	$9.80	$18.17	$0.00	$58.14
4	75	$32.33	$9.80	$18.17	$0.00	$60.30
5	80	$34.48	$9.80	$18.17	$0.00	$62.45
6	80	$34.48	$9.80	$18.17	$0.00	$62.45
7	90	$38.79	$9.80	$18.17	$0.00	$66.76
8	90	$38.79	$9.80	$18.17	$0.00	$66.76

Notes:

Apprentice to Journeyworker Ratio:1:3

PIPEFITTER & STEAMFITTER *PIPEFITTERS LOCAL 537*	09/01/2014	$48.69	$9.20	$16.64	$0.00	$74.53
	03/01/2015	$49.69	$9.20	$16.64	$0.00	$75.53
	09/01/2015	$50.69	$9.20	$16.64	$0.00	$76.53
	03/01/2016	$51.69	$9.20	$16.64	$0.00	$77.53
	09/01/2016	$52.69	$9.20	$16.64	$0.00	$78.53
	03/01/2017	$53.69	$9.20	$16.64	$0.00	$79.53

Classification	Effective Date	Base Wage	Health	Pension	Supplemental Unemployment	Total Rate

Apprentice - *PIPEFITTER - Local 537*

Effective Date - 09/01/2014

Step	percent	Apprentice Base Wage	Health	Pension	Supplemental Unemployment	Total Rate
1	40	$19.48	$9.20	$7.50	$0.00	$36.18
2	45	$21.91	$9.20	$16.64	$0.00	$47.75
3	60	$29.21	$9.20	$16.64	$0.00	$55.05
4	70	$34.08	$9.20	$16.64	$0.00	$59.92
5	80	$38.95	$9.20	$16.64	$0.00	$64.79

Effective Date - 03/01/2015

Step	percent	Apprentice Base Wage	Health	Pension	Supplemental Unemployment	Total Rate
1	40	$19.88	$9.20	$7.50	$0.00	$36.58
2	45	$22.36	$9.20	$16.64	$0.00	$48.20
3	60	$29.81	$9.20	$16.64	$0.00	$55.65
4	70	$34.78	$9.20	$16.64	$0.00	$60.62
5	80	$39.75	$9.20	$16.64	$0.00	$65.59

Notes:

** 1:3; 3:15; 1:10 thereafter / Steps are 1 yr.
Refrig/AC Mechanic **1:1;1:2;2:4;3:6;4:8;5:10;6:12;7:14;8:17;9:20;10:23(Max)

Apprentice to Journeyworker Ratio:**

PIPELAYER *LABORERS - ZONE 1*	12/01/2014	$35.10	$7.30	$12.70	$0.00	$55.10
	06/01/2015	$35.85	$7.30	$12.70	$0.00	$55.85
	12/01/2015	$36.60	$7.30	$12.70	$0.00	$56.60
	06/01/2016	$37.35	$7.30	$12.70	$0.00	$57.35
	12/01/2016	$38.35	$7.30	$12.70	$0.00	$58.35
For apprentice rates see "Apprentice- LABORER"						
PLUMBERS & GASFITTERS *PLUMBERS & GASFITTERS LOCAL 12*	09/01/2014	$49.66	$10.32	$14.54	$0.00	$74.52
	03/01/2015	$50.66	$10.32	$14.54	$0.00	$75.52
	09/01/2015	$51.66	$10.32	$14.54	$0.00	$76.52
	03/01/2016	$52.81	$10.32	$14.54	$0.00	$77.67
	09/01/2016	$53.86	$10.32	$14.54	$0.00	$78.72
	03/01/2017	$54.86	$10.32	$14.54	$0.00	$79.72

Classification	Effective Date	Base Wage	Health	Pension	Supplemental Unemployment	Total Rate

Apprentice - *PLUMBER/GASFITTER - Local 12*

Effective Date - 09/01/2014

Step	percent	Apprentice Base Wage	Health	Pension	Supplemental Unemployment	Total Rate
1	35	$17.38	$10.32	$5.42	$0.00	$33.12
2	40	$19.86	$10.32	$6.13	$0.00	$36.31
3	55	$27.31	$10.32	$8.23	$0.00	$45.86
4	65	$32.28	$10.32	$9.64	$0.00	$52.24
5	75	$37.25	$10.32	$11.04	$0.00	$58.61

Effective Date - 03/01/2015

Step	percent	Apprentice Base Wage	Health	Pension	Supplemental Unemployment	Total Rate
1	35	$17.73	$10.32	$5.42	$0.00	$33.47
2	40	$20.26	$10.32	$6.11	$0.00	$36.69
3	55	$27.86	$10.32	$8.22	$0.00	$46.40
4	65	$32.93	$10.32	$9.62	$0.00	$52.87
5	75	$38.00	$10.32	$11.03	$0.00	$59.35

Notes:

** 1:2; 2:6; 3:10; 4:14; 5:19/Steps are 1 yr
Step4 with lic$55.42 Step5 with lic$61.79

Apprentice to Journeyworker Ratio:**

PNEUMATIC CONTROLS (TEMP.) *PIPEFITTERS LOCAL 537*	09/01/2014	$48.69	$9.20	$16.64	$0.00	$74.53
	03/01/2015	$49.69	$9.20	$16.64	$0.00	$75.53
	09/01/2015	$50.69	$9.20	$16.64	$0.00	$76.53
	03/01/2016	$51.69	$9.20	$16.64	$0.00	$77.53
	09/01/2016	$52.69	$9.20	$16.64	$0.00	$78.53
	03/01/2017	$53.69	$9.20	$16.64	$0.00	$79.53

For apprentice rates see "Apprentice- PIPEFITTER" or "PLUMBER/PIPEFITTER"

PNEUMATIC DRILL/TOOL OPERATOR *LABORERS - ZONE 1*	12/01/2014	$35.10	$7.30	$12.70	$0.00	$55.10
	06/01/2015	$35.85	$7.30	$12.70	$0.00	$55.85
	12/01/2015	$36.60	$7.30	$12.70	$0.00	$56.60
	06/01/2016	$37.35	$7.30	$12.70	$0.00	$57.35
	12/01/2016	$38.35	$7.30	$12.70	$0.00	$58.35

For apprentice rates see "Apprentice- LABORER"

POWDERMAN & BLASTER *LABORERS - ZONE 1*	12/01/2014	$35.85	$7.30	$12.70	$0.00	$55.85
	06/01/2015	$36.60	$7.30	$12.70	$0.00	$56.60
	12/01/2015	$37.35	$7.30	$12.70	$0.00	$57.35
	06/01/2016	$38.10	$7.30	$12.70	$0.00	$58.10
	12/01/2016	$39.10	$7.30	$12.70	$0.00	$59.10

For apprentice rates see "Apprentice- LABORER"

Classification	Effective Date	Base Wage	Health	Pension	Supplemental Unemployment	Total Rate
POWER SHOVEL/DERRICK/TRENCHING MACHINE *OPERATING ENGINEERS LOCAL 4*	12/01/2014	$42.39	$10.00	$14.30	$0.00	$66.69
	06/01/2015	$43.14	$10.00	$14.30	$0.00	$67.44
	12/01/2015	$44.39	$10.00	$14.30	$0.00	$68.69
	06/01/2016	$45.14	$10.00	$14.30	$0.00	$69.44
	12/01/2016	$46.39	$10.00	$14.30	$0.00	$70.69
	06/01/2017	$47.39	$10.00	$14.30	$0.00	$71.69
	12/01/2017	$48.39	$10.00	$14.30	$0.00	$72.69
For apprentice rates see "Apprentice- OPERATING ENGINEERS"						
PUMP OPERATOR (CONCRETE) *OPERATING ENGINEERS LOCAL 4*	12/01/2014	$42.39	$10.00	$14.30	$0.00	$66.69
	06/01/2015	$43.14	$10.00	$14.30	$0.00	$67.44
	12/01/2015	$44.39	$10.00	$14.30	$0.00	$68.69
	06/01/2016	$45.14	$10.00	$14.30	$0.00	$69.44
	12/01/2016	$46.39	$10.00	$14.30	$0.00	$70.69
	06/01/2017	$47.39	$10.00	$14.30	$0.00	$71.69
	12/01/2017	$48.39	$10.00	$14.30	$0.00	$72.69
For apprentice rates see "Apprentice- OPERATING ENGINEERS"						
PUMP OPERATOR (DEWATERING, OTHER) *OPERATING ENGINEERS LOCAL 4*	12/01/2014	$29.40	$10.00	$14.30	$0.00	$53.70
	06/01/2015	$29.92	$10.00	$14.30	$0.00	$54.22
	12/01/2015	$30.79	$10.00	$14.30	$0.00	$55.09
	06/01/2016	$31.31	$10.00	$14.30	$0.00	$55.61
	12/01/2016	$32.18	$10.00	$14.30	$0.00	$56.48
	06/01/2017	$32.87	$10.00	$14.30	$0.00	$57.17
	12/01/2017	$33.56	$10.00	$14.30	$0.00	$57.86
For apprentice rates see "Apprentice- OPERATING ENGINEERS"						
READY MIX CONCRETE DRIVERS after 4/30/10 (Drivers Hired After 4/30/2010)*TEAMSTERS LOCAL 25c*	07/01/2014	$27.73	$7.73	$8.65	$0.00	$44.11
	05/01/2015	$27.88	$7.73	$8.92	$0.00	$44.53
	07/01/2015	$27.88	$7.98	$8.92	$0.00	$44.78
	05/01/2016	$28.03	$7.98	$9.31	$0.00	$45.32
	07/01/2016	$28.03	$8.23	$9.31	$0.00	$45.57
	05/01/2017	$28.18	$8.23	$9.72	$0.00	$46.13
	07/01/2017	$28.18	$8.48	$9.72	$0.00	$46.38
READY-MIX CONCRETE DRIVER *TEAMSTERS LOCAL 25c*	07/01/2014	$29.03	$7.73	$8.65	$0.00	$45.41
	05/01/2015	$29.18	$7.73	$8.92	$0.00	$45.83
	07/01/2015	$29.18	$7.98	$8.92	$0.00	$46.08
	05/01/2016	$29.33	$7.98	$9.31	$0.00	$46.62
	07/01/2016	$29.33	$8.23	$9.31	$0.00	$46.87
	05/01/2017	$29.48	$8.23	$9.72	$0.00	$47.43
	07/01/2017	$29.48	$8.48	$9.72	$0.00	$47.68
RECLAIMERS *OPERATING ENGINEERS LOCAL 4*	12/01/2014	$41.99	$10.00	$14.30	$0.00	$66.29
	06/01/2015	$42.73	$10.00	$14.30	$0.00	$67.03
	12/01/2015	$43.97	$10.00	$14.30	$0.00	$68.27
	06/01/2016	$44.72	$10.00	$14.30	$0.00	$69.02
	12/01/2016	$45.95	$10.00	$14.30	$0.00	$70.25
	06/01/2017	$46.94	$10.00	$14.30	$0.00	$71.24
	12/01/2017	$47.93	$10.00	$14.30	$0.00	$72.23
For apprentice rates see "Apprentice- OPERATING ENGINEERS"						

Classification	Effective Date	Base Wage	Health	Pension	Supplemental Unemployment	Total Rate
RESIDENTIAL WOOD FRAME (All Other Work) *CARPENTERS -ZONE 2 (Residential Wood)*	04/01/2011	$24.24	$8.67	$15.51	$0.00	$48.42
RESIDENTIAL WOOD FRAME CARPENTER ** ** The Residential Wood Frame Carpenter classification applies only to the construction of new, wood frame residences that do not exceed four stories including the basement.*CARPENTERS -ZONE 2 (Residential Wood)*	05/01/2011	$24.24	$6.34	$6.23	$0.00	$36.81

As of 9/1/09 Carpentry work on wood-frame residential WEATHERIZATION projects shall be paid the RESIDENTIAL WOOD FRAME CARPENTER rate.

Apprentice - *CARPENTER (Residential Wood Frame) - Zone 2*

Effective Date - 05/01/2011

Step	percent	Apprentice Base Wage	Health	Pension	Supplemental Unemployment	Total Rate
1	60	$14.54	$6.34	$0.00	$0.00	$20.88
2	60	$14.54	$6.34	$6.23	$0.00	$27.11
3	65	$15.76	$6.34	$6.23	$0.00	$28.33
4	70	$16.97	$6.34	$6.23	$0.00	$29.54
5	75	$18.18	$6.34	$6.23	$0.00	$30.75
6	80	$19.39	$6.34	$6.23	$0.00	$31.96
7	85	$20.60	$6.34	$6.23	$0.00	$33.17
8	90	$21.82	$6.34	$6.23	$0.00	$34.39

Notes:

Apprentice to Journeyworker Ratio:1:5

RIDE-ON MOTORIZED BUGGY OPERATOR *LABORERS - ZONE 1*	12/01/2014	$35.10	$7.30	$12.70	$0.00	$55.10
	06/01/2015	$35.85	$7.30	$12.70	$0.00	$55.85
	12/01/2015	$36.60	$7.30	$12.70	$0.00	$56.60
	06/01/2016	$37.35	$7.30	$12.70	$0.00	$57.35
	12/01/2016	$38.35	$7.30	$12.70	$0.00	$58.35
For apprentice rates see "Apprentice- LABORER"						
ROLLER/SPREADER/MULCHING MACHINE *OPERATING ENGINEERS LOCAL 4*	12/01/2014	$41.99	$10.00	$14.30	$0.00	$66.29
	06/01/2015	$42.73	$10.00	$14.30	$0.00	$67.03
	12/01/2015	$43.97	$10.00	$14.30	$0.00	$68.27
	06/01/2016	$44.72	$10.00	$14.30	$0.00	$69.02
	12/01/2016	$45.95	$10.00	$14.30	$0.00	$70.25
	06/01/2017	$46.94	$10.00	$14.30	$0.00	$71.24
	12/01/2017	$47.93	$10.00	$14.30	$0.00	$72.23
For apprentice rates see "Apprentice- OPERATING ENGINEERS"						
ROOFER (Inc.Roofer Waterproofng &Roofer Damproofg) *ROOFERS LOCAL 33*	08/01/2014	$39.21	$10.50	$11.60	$0.00	$61.31
	02/01/2015	$40.11	$10.50	$11.60	$0.00	$62.21
	08/01/2015	$41.01	$10.50	$11.60	$0.00	$63.11
	02/01/2016	$41.91	$10.50	$11.60	$0.00	$64.01

Classification	Effective Date	Base Wage	Health	Pension	Supplemental Unemployment	Total Rate

Apprentice - *ROOFER - Local 33*

Effective Date - 08/01/2014

Step	percent	Apprentice Base Wage	Health	Pension	Supplemental Unemployment	Total Rate
1	50	$19.61	$10.50	$3.38	$0.00	$33.49
2	60	$23.53	$10.50	$11.60	$0.00	$45.63
3	65	$25.49	$10.50	$11.60	$0.00	$47.59
4	75	$29.41	$10.50	$11.60	$0.00	$51.51
5	85	$33.33	$10.50	$11.60	$0.00	$55.43

Effective Date - 02/01/2015

Step	percent	Apprentice Base Wage	Health	Pension	Supplemental Unemployment	Total Rate
1	50	$20.06	$10.50	$3.38	$0.00	$33.94
2	60	$24.07	$10.50	$11.60	$0.00	$46.17
3	65	$26.07	$10.50	$11.60	$0.00	$48.17
4	75	$30.08	$10.50	$11.60	$0.00	$52.18
5	85	$34.09	$10.50	$11.60	$0.00	$56.19

Notes: ** 1:5, 2:6-10, the 1:10; Reroofing: 1:4, then 1:1
Step 1 is 2000 hrs.; Steps 2-5 are 1000 hrs.

Apprentice to Journeyworker Ratio:**

ROOFER SLATE / TILE / PRECAST CONCRETE *ROOFERS LOCAL 33*	08/01/2014	$39.46	$10.50	$11.60	$0.00	$61.56
	02/01/2015	$40.36	$10.50	$11.60	$0.00	$62.46
	08/01/2015	$41.26	$10.50	$11.60	$0.00	$63.36
	02/01/2016	$42.16	$10.50	$11.60	$0.00	$64.26
For apprentice rates see "Apprentice- ROOFER"						
SHEETMETAL WORKER *SHEETMETAL WORKERS LOCAL 17 - A*	08/01/2014	$42.79	$9.82	$20.54	$2.19	$75.34
	02/01/2015	$43.69	$9.82	$20.54	$2.19	$76.24
	08/01/2015	$44.69	$9.82	$20.54	$2.19	$77.24
	02/01/2016	$45.69	$9.82	$20.54	$2.19	$78.24
	08/01/2016	$46.84	$9.82	$20.54	$2.19	$79.39
	02/01/2017	$47.94	$9.82	$20.54	$2.19	$80.49
	08/01/2017	$49.04	$9.82	$20.54	$2.19	$81.59
	02/01/2018	$50.19	$9.82	$20.54	$2.19	$82.74

Classification	Effective Date	Base Wage	Health	Pension	Supplemental Unemployment	Total Rate

Apprentice - *SHEET METAL WORKER - Local 17-A*

Effective Date - 08/01/2014

Step	percent	Apprentice Base Wage	Health	Pension	Supplemental Unemployment	Total Rate
1	40	$17.12	$9.82	$4.58	$0.00	$31.52
2	40	$17.12	$9.82	$4.58	$0.00	$31.52
3	45	$19.26	$9.82	$9.09	$1.15	$39.32
4	45	$19.26	$9.82	$9.09	$1.15	$39.32
5	50	$21.40	$9.82	$9.91	$1.23	$42.36
6	50	$21.40	$9.82	$10.16	$1.24	$42.62
7	60	$25.67	$9.82	$11.55	$1.41	$48.45
8	65	$27.81	$9.82	$12.38	$1.50	$51.51
9	75	$32.09	$9.82	$14.02	$1.68	$57.61
10	85	$36.37	$9.82	$15.16	$1.84	$63.19

Effective Date - 02/01/2015

Step	percent	Apprentice Base Wage	Health	Pension	Supplemental Unemployment	Total Rate
1	40	$17.48	$9.82	$4.58	$0.00	$31.88
2	40	$17.48	$9.82	$4.58	$0.00	$31.88
3	45	$19.66	$9.82	$9.09	$1.16	$39.73
4	45	$19.66	$9.82	$9.09	$1.16	$39.73
5	50	$21.85	$9.82	$9.91	$1.25	$42.83
6	50	$21.85	$9.82	$10.16	$1.25	$43.08
7	60	$26.21	$9.82	$11.55	$1.43	$49.01
8	65	$28.40	$9.82	$12.38	$1.52	$52.12
9	75	$32.77	$9.82	$14.02	$1.70	$58.31
10	85	$37.14	$9.82	$15.16	$1.86	$63.98

Notes:

Steps are 6 mos.

Apprentice to Journeyworker Ratio:1:4

SIGN ERECTOR *PAINTERS LOCAL 35 - ZONE 1*	06/01/2013	$25.81	$7.07	$7.05	$0.00	$39.93

Classification	Effective Date	Base Wage	Health	Pension	Supplemental Unemployment	Total Rate

Apprentice - *SIGN ERECTOR - Local 35 Zone 1*

Effective Date - 06/01/2013

Step	percent	Apprentice Base Wage	Health	Pension	Supplemental Unemployment	Total Rate
1	50	$12.91	$7.07	$0.00	$0.00	$19.98
2	55	$14.20	$7.07	$2.45	$0.00	$23.72
3	60	$15.49	$7.07	$2.45	$0.00	$25.01
4	65	$16.78	$7.07	$2.45	$0.00	$26.30
5	70	$18.07	$7.07	$7.05	$0.00	$32.19
6	75	$19.36	$7.07	$7.05	$0.00	$33.48
7	80	$20.65	$7.07	$7.05	$0.00	$34.77
8	85	$21.94	$7.07	$7.05	$0.00	$36.06
9	90	$23.23	$7.07	$7.05	$0.00	$37.35

Notes:

Steps are 4 mos.

Apprentice to Journeyworker Ratio:1:1

SPECIALIZED EARTH MOVING EQUIP < 35 TONS *TEAMSTERS JOINT COUNCIL NO. 10 ZONE A*	12/01/2014	$32.69	$9.91	$9.33	$0.00	$51.93
	06/01/2015	$33.04	$9.91	$9.33	$0.00	$52.28
	08/01/2015	$33.04	$10.41	$9.33	$0.00	$52.78
	12/01/2015	$33.04	$10.41	$10.08	$0.00	$53.53
	06/01/2016	$33.54	$10.41	$10.08	$0.00	$54.03
	08/01/2016	$33.54	$10.91	$10.08	$0.00	$54.53
	12/01/2016	$33.54	$10.91	$10.89	$0.00	$55.34
SPECIALIZED EARTH MOVING EQUIP > 35 TONS *TEAMSTERS JOINT COUNCIL NO. 10 ZONE A*	12/01/2014	$32.98	$9.91	$9.33	$0.00	$52.22
	06/01/2015	$33.33	$9.91	$9.33	$0.00	$52.57
	08/01/2015	$33.33	$10.41	$9.33	$0.00	$53.07
	12/01/2015	$33.33	$10.41	$10.08	$0.00	$53.82
	06/01/2016	$33.83	$10.41	$10.08	$0.00	$54.32
	08/01/2016	$33.83	$10.91	$10.08	$0.00	$54.82
	12/01/2016	$33.83	$10.91	$10.89	$0.00	$55.63
SPRINKLER FITTER *SPRINKLER FITTERS LOCAL 550 - (Section A) Zone 1*	10/01/2014	$53.73	$8.42	$14.60	$0.00	$76.75
	01/01/2015	$53.73	$8.42	$14.75	$0.00	$76.90
	03/01/2015	$54.73	$8.42	$14.75	$0.00	$77.90
	10/01/2015	$55.88	$8.42	$14.75	$0.00	$79.05
	01/01/2016	$55.88	$8.67	$14.90	$0.00	$79.45
	03/01/2016	$56.88	$8.67	$14.90	$0.00	$80.45
	10/01/2016	$58.03	$8.67	$14.90	$0.00	$81.60
	03/01/2017	$59.03	$8.67	$14.90	$0.00	$82.60

Classification	Effective Date	Base Wage	Health	Pension	Supplemental Unemployment	Total Rate

Apprentice - *SPRINKLER FITTER - Local 550 (Section A) Zone 1*

Effective Date - 10/01/2014

Step	percent	Apprentice Base Wage	Health	Pension	Supplemental Unemployment	Total Rate
1	35	$18.81	$8.42	$8.25	$0.00	$35.48
2	40	$21.49	$8.42	$8.25	$0.00	$38.16
3	45	$24.18	$8.42	$8.25	$0.00	$40.85
4	50	$26.87	$8.42	$8.25	$0.00	$43.54
5	55	$29.55	$8.42	$8.25	$0.00	$46.22
6	60	$32.24	$8.42	$8.25	$0.00	$48.91
7	65	$34.92	$8.42	$8.25	$0.00	$51.59
8	70	$37.61	$8.42	$8.25	$0.00	$54.28
9	75	$40.30	$8.42	$8.25	$0.00	$56.97
10	80	$42.98	$8.42	$8.25	$0.00	$59.65

Effective Date - 01/01/2015

Step	percent	Apprentice Base Wage	Health	Pension	Supplemental Unemployment	Total Rate
1	35	$18.81	$8.42	$8.40	$0.00	$35.63
2	40	$21.49	$8.42	$8.40	$0.00	$38.31
3	45	$24.18	$8.42	$8.40	$0.00	$41.00
4	50	$26.87	$8.42	$8.40	$0.00	$43.69
5	55	$29.55	$8.42	$8.40	$0.00	$46.37
6	60	$32.24	$8.42	$8.40	$0.00	$49.06
7	65	$34.92	$8.42	$8.40	$0.00	$51.74
8	70	$37.61	$8.42	$8.40	$0.00	$54.43
9	75	$40.30	$8.42	$8.40	$0.00	$57.12
10	80	$42.98	$8.42	$8.40	$0.00	$59.80

Notes: Apprentice entered prior 9/30/10:
40/45/50/55/60/65/70/75/80/85
Steps are 850 hours

Apprentice to Journeyworker Ratio:1:3

STEAM BOILER OPERATOR *OPERATING ENGINEERS LOCAL 4*	12/01/2014	$41.99	$10.00	$14.30	$0.00	$66.29
	06/01/2015	$42.73	$10.00	$14.30	$0.00	$67.03
	12/01/2015	$43.97	$10.00	$14.30	$0.00	$68.27
	06/01/2016	$44.72	$10.00	$14.30	$0.00	$69.02
	12/01/2016	$45.95	$10.00	$14.30	$0.00	$70.25
	06/01/2017	$46.94	$10.00	$14.30	$0.00	$71.24
	12/01/2017	$47.93	$10.00	$14.30	$0.00	$72.23

For apprentice rates see "Apprentice- OPERATING ENGINEERS"

Classification	Effective Date	Base Wage	Health	Pension	Supplemental Unemployment	Total Rate
TAMPERS, SELF-PROPELLED OR TRACTOR DRAWN *OPERATING ENGINEERS LOCAL 4*	12/01/2014	$41.99	$10.00	$14.30	$0.00	$66.29
	06/01/2015	$42.73	$10.00	$14.30	$0.00	$67.03
	12/01/2015	$43.97	$10.00	$14.30	$0.00	$68.27
	06/01/2016	$44.72	$10.00	$14.30	$0.00	$69.02
	12/01/2016	$45.95	$10.00	$14.30	$0.00	$70.25
	06/01/2017	$46.94	$10.00	$14.30	$0.00	$71.24
	12/01/2017	$47.93	$10.00	$14.30	$0.00	$72.23
For apprentice rates see "Apprentice- OPERATING ENGINEERS"						
TELECOMMUNICATION TECHNICIAN *ELECTRICIANS LOCAL 103*	09/01/2014	$33.59	$13.00	$13.36	$0.00	$59.95
	03/01/2015	$33.88	$13.00	$13.70	$0.00	$60.58
	09/01/2015	$34.60	$13.00	$13.72	$0.00	$61.32
	03/01/2016	$35.31	$13.00	$13.74	$0.00	$62.05

Apprentice - *TELECOMMUNICATION TECHNICIAN - Local 103*

Effective Date - 09/01/2014

Step	percent	Apprentice Base Wage	Health	Pension	Supplemental Unemployment	Total Rate
1	40	$13.44	$13.00	$0.40	$0.00	$26.84
2	40	$13.44	$13.00	$0.40	$0.00	$26.84
3	45	$15.12	$13.00	$10.57	$0.00	$38.69
4	45	$15.12	$13.00	$10.57	$0.00	$38.69
5	50	$16.80	$13.00	$10.83	$0.00	$40.63
6	55	$18.47	$13.00	$11.08	$0.00	$42.55
7	60	$20.15	$13.00	$11.33	$0.00	$44.48
8	65	$21.83	$13.00	$11.59	$0.00	$46.42
9	70	$23.51	$13.00	$11.85	$0.00	$48.36
10	75	$25.19	$13.00	$12.10	$0.00	$50.29

Effective Date - 03/01/2015

Step	percent	Apprentice Base Wage	Health	Pension	Supplemental Unemployment	Total Rate
1	40	$13.55	$13.00	$0.41	$0.00	$26.96
2	40	$13.55	$13.00	$0.41	$0.00	$26.96
3	45	$15.25	$13.00	$10.87	$0.00	$39.12
4	45	$15.25	$13.00	$10.87	$0.00	$39.12
5	50	$16.94	$13.00	$11.13	$0.00	$41.07
6	55	$18.63	$13.00	$11.38	$0.00	$43.01
7	60	$20.33	$13.00	$11.64	$0.00	$44.97
8	65	$22.02	$13.00	$11.89	$0.00	$46.91
9	70	$23.72	$13.00	$12.15	$0.00	$48.87
10	75	$25.41	$13.00	$12.41	$0.00	$50.82

Notes:

Apprentice to Journeyworker Ratio:1:1

Classification	Effective Date	Base Wage	Health	Pension	Supplemental Unemployment	Total Rate
TERRAZZO FINISHERS *BRICKLAYERS LOCAL 3 - MARBLE & TILE*	08/01/2014	$47.90	$10.18	$18.22	$0.00	$76.30
	02/01/2015	$48.46	$10.18	$18.22	$0.00	$76.86
	08/01/2015	$49.36	$10.18	$18.29	$0.00	$77.83
	02/01/2016	$49.93	$10.18	$18.29	$0.00	$78.40
	08/01/2016	$50.83	$10.18	$18.37	$0.00	$79.38
	02/01/2017	$51.40	$10.18	$18.37	$0.00	$79.95

Apprentice - *TERRAZZO FINISHER - Local 3 Marble & Tile*

Effective Date - 08/01/2014

Step	percent	Apprentice Base Wage	Health	Pension	Supplemental Unemployment	Total Rate
1	50	$23.95	$10.18	$18.22	$0.00	$52.35
2	60	$28.74	$10.18	$18.22	$0.00	$57.14
3	70	$33.53	$10.18	$18.22	$0.00	$61.93
4	80	$38.32	$10.18	$18.22	$0.00	$66.72
5	90	$43.11	$10.18	$18.22	$0.00	$71.51

Effective Date - 02/01/2015

Step	percent	Apprentice Base Wage	Health	Pension	Supplemental Unemployment	Total Rate
1	50	$24.23	$10.18	$18.22	$0.00	$52.63
2	60	$29.08	$10.18	$18.22	$0.00	$57.48
3	70	$33.92	$10.18	$18.22	$0.00	$62.32
4	80	$38.77	$10.18	$18.22	$0.00	$67.17
5	90	$43.61	$10.18	$18.22	$0.00	$72.01

Notes:

Apprentice to Journeyworker Ratio:1:3

TEST BORING DRILLER *LABORERS - FOUNDATION AND MARINE*	12/01/2014	$36.20	$7.30	$12.90	$0.00	$56.40
	06/01/2015	$36.95	$7.30	$12.90	$0.00	$57.15
	12/01/2015	$37.70	$7.30	$12.90	$0.00	$57.90
	06/01/2016	$38.45	$7.30	$12.90	$0.00	$58.65
	12/01/2016	$39.45	$7.30	$12.90	$0.00	$59.65

For apprentice rates see "Apprentice- LABORER"

TEST BORING DRILLER HELPER *LABORERS - FOUNDATION AND MARINE*	12/01/2014	$34.92	$7.30	$12.90	$0.00	$55.12
	06/01/2015	$35.67	$7.30	$12.90	$0.00	$55.87
	12/01/2015	$36.42	$7.30	$12.90	$0.00	$56.62
	06/01/2016	$37.17	$7.30	$12.90	$0.00	$57.37
	12/01/2016	$38.17	$7.30	$12.90	$0.00	$58.37

For apprentice rates see "Apprentice- LABORER"

TEST BORING LABORER *LABORERS - FOUNDATION AND MARINE*	12/01/2014	$34.80	$7.30	$12.90	$0.00	$55.00
	06/01/2015	$35.55	$7.30	$12.90	$0.00	$55.75
	12/01/2015	$36.30	$7.30	$12.90	$0.00	$56.50
	06/01/2016	$37.05	$7.30	$12.90	$0.00	$57.25
	12/01/2016	$38.05	$7.30	$12.90	$0.00	$58.25

For apprentice rates see "Apprentice- LABORER"

Classification	Effective Date	Base Wage	Health	Pension	Supplemental Unemployment	Total Rate
TRACTORS/PORTABLE STEAM GENERATORS *OPERATING ENGINEERS LOCAL 4*	12/01/2014	$41.99	$10.00	$14.30	$0.00	$66.29
	06/01/2015	$42.73	$10.00	$14.30	$0.00	$67.03
	12/01/2015	$43.97	$10.00	$14.30	$0.00	$68.27
	06/01/2016	$44.72	$10.00	$14.30	$0.00	$69.02
	12/01/2016	$45.95	$10.00	$14.30	$0.00	$70.25
	06/01/2017	$46.94	$10.00	$14.30	$0.00	$71.24
	12/01/2017	$47.93	$10.00	$14.30	$0.00	$72.23
For apprentice rates see "Apprentice- OPERATING ENGINEERS"						
TRAILERS FOR EARTH MOVING EQUIPMENT *TEAMSTERS JOINT COUNCIL NO. 10 ZONE A*	12/01/2014	$33.27	$9.91	$9.33	$0.00	$52.51
	06/01/2015	$33.62	$9.91	$9.33	$0.00	$52.86
	08/01/2015	$33.62	$10.41	$9.33	$0.00	$53.36
	12/01/2015	$33.62	$10.41	$10.08	$0.00	$54.11
	06/01/2016	$34.12	$10.41	$10.08	$0.00	$54.61
	08/01/2016	$34.12	$10.91	$10.08	$0.00	$55.11
	12/01/2016	$34.12	$10.91	$10.89	$0.00	$55.92
TUNNEL WORK - COMPRESSED AIR *LABORERS (COMPRESSED AIR)*	12/01/2014	$47.08	$7.30	$13.30	$0.00	$67.68
	06/01/2015	$47.83	$7.30	$13.30	$0.00	$68.43
	12/01/2015	$48.58	$7.30	$13.30	$0.00	$69.18
	06/01/2016	$49.33	$7.30	$13.30	$0.00	$69.93
	12/01/2016	$50.33	$7.30	$13.30	$0.00	$70.93
For apprentice rates see "Apprentice- LABORER"						
TUNNEL WORK - COMPRESSED AIR (HAZ. WASTE) *LABORERS (COMPRESSED AIR)*	12/01/2014	$49.08	$7.30	$13.30	$0.00	$69.68
	06/01/2015	$49.83	$7.30	$13.30	$0.00	$70.43
	12/01/2015	$50.58	$7.30	$13.30	$0.00	$71.18
	06/01/2016	$51.33	$7.30	$13.30	$0.00	$71.93
	12/01/2016	$52.33	$7.30	$13.30	$0.00	$72.93
For apprentice rates see "Apprentice- LABORER"						
TUNNEL WORK - FREE AIR *LABORERS (FREE AIR TUNNEL)*	12/01/2014	$39.15	$7.30	$13.30	$0.00	$59.75
	06/01/2015	$39.90	$7.30	$13.30	$0.00	$60.50
	12/01/2015	$40.65	$7.30	$13.30	$0.00	$61.25
	06/01/2016	$41.40	$7.30	$13.30	$0.00	$62.00
	12/01/2016	$42.40	$7.30	$13.30	$0.00	$63.00
For apprentice rates see "Apprentice- LABORER"						
TUNNEL WORK - FREE AIR (HAZ. WASTE) *LABORERS (FREE AIR TUNNEL)*	12/01/2014	$41.15	$7.30	$13.30	$0.00	$61.75
	06/01/2015	$41.90	$7.30	$13.30	$0.00	$62.50
	12/01/2015	$42.65	$7.30	$13.30	$0.00	$63.25
	06/01/2016	$43.40	$7.30	$13.30	$0.00	$64.00
	12/01/2016	$44.40	$7.30	$13.30	$0.00	$65.00
For apprentice rates see "Apprentice- LABORER"						
VAC-HAUL *TEAMSTERS JOINT COUNCIL NO. 10 ZONE A*	12/01/2014	$32.69	$9.91	$9.33	$0.00	$51.93
	06/01/2015	$33.04	$9.91	$9.33	$0.00	$52.28
	08/01/2015	$33.04	$10.41	$9.33	$0.00	$52.78
	12/01/2015	$33.04	$10.41	$10.08	$0.00	$53.53
	06/01/2016	$33.54	$10.41	$10.08	$0.00	$54.03
	08/01/2016	$33.54	$10.91	$10.08	$0.00	$54.53
	12/01/2016	$33.54	$10.91	$10.89	$0.00	$55.34

Classification	Effective Date	Base Wage	Health	Pension	Supplemental Unemployment	Total Rate
WAGON DRILL OPERATOR *LABORERS - ZONE 1*	12/01/2014	$35.10	$7.30	$12.70	$0.00	$55.10
	06/01/2015	$35.85	$7.30	$12.70	$0.00	$55.85
	12/01/2015	$36.60	$7.30	$12.70	$0.00	$56.60
	06/01/2016	$37.35	$7.30	$12.70	$0.00	$57.35
	12/01/2016	$38.35	$7.30	$12.70	$0.00	$58.35
For apprentice rates see "Apprentice- LABORER"						
WASTE WATER PUMP OPERATOR *OPERATING ENGINEERS LOCAL 4*	12/01/2014	$42.39	$10.00	$14.30	$0.00	$66.69
	06/01/2015	$43.14	$10.00	$14.30	$0.00	$67.44
	12/01/2015	$44.39	$10.00	$14.30	$0.00	$68.69
	06/01/2016	$45.14	$10.00	$14.30	$0.00	$69.44
	12/01/2016	$46.39	$10.00	$14.30	$0.00	$70.69
	06/01/2017	$47.39	$10.00	$14.30	$0.00	$71.69
	12/01/2017	$48.39	$10.00	$14.30	$0.00	$72.69
For apprentice rates see "Apprentice- OPERATING ENGINEERS"						
WATER METER INSTALLER *PLUMBERS & GASFITTERS LOCAL 12*	09/01/2014	$49.66	$10.32	$14.54	$0.00	$74.52
	03/01/2015	$50.66	$10.32	$14.54	$0.00	$75.52
	09/01/2015	$51.66	$10.32	$14.54	$0.00	$76.52
	03/01/2016	$52.81	$10.32	$14.54	$0.00	$77.67
	09/01/2016	$53.86	$10.32	$14.54	$0.00	$78.72
	03/01/2017	$54.86	$10.32	$14.54	$0.00	$79.72
For apprentice rates see "Apprentice- PLUMBER/PIPEFITTER" or "PLUMBER/GASFITTER"						
Outside Electrical - East						
CABLE TECHNICIAN (Power Zone) *OUTSIDE ELECTRICAL WORKERS - EAST LOCAL 104*	09/01/2013	$25.66	$8.70	$4.48	$0.00	$38.84
For apprentice rates see "Apprentice- LINEMAN"						
CABLEMAN (Underground Ducts & Cables) *OUTSIDE ELECTRICAL WORKERS - EAST LOCAL 104*	09/01/2013	$36.55	$8.70	$6.58	$0.00	$51.83
For apprentice rates see "Apprentice- LINEMAN"						
DRIVER / GROUNDMAN CDL *OUTSIDE ELECTRICAL WORKERS - EAST LOCAL 104*	09/01/2013	$29.94	$8.70	$6.05	$0.00	$44.69
For apprentice rates see "Apprentice- LINEMAN"						
DRIVER / GROUNDMAN -Inexperienced (<2000 Hrs) *OUTSIDE ELECTRICAL WORKERS - EAST LOCAL 104*	09/01/2013	$23.52	$8.70	$5.24	$0.00	$37.46
For apprentice rates see "Apprentice- LINEMAN"						
EQUIPMENT OPERATOR (Class A CDL) *OUTSIDE ELECTRICAL WORKERS - EAST LOCAL 104*	09/01/2013	$36.35	$8.70	$9.43	$0.00	$54.48
For apprentice rates see "Apprentice- LINEMAN"						
EQUIPMENT OPERATOR (Class B CDL) *OUTSIDE ELECTRICAL WORKERS - EAST LOCAL 104*	09/01/2013	$32.08	$8.70	$6.59	$0.00	$47.37
For apprentice rates see "Apprentice- LINEMAN"						
GROUNDMAN *OUTSIDE ELECTRICAL WORKERS - EAST LOCAL 104*	09/01/2013	$23.52	$8.70	$3.72	$0.00	$35.94
For apprentice rates see "Apprentice- LINEMAN"						
GROUNDMAN -Inexperienced (<2000 Hrs.) *OUTSIDE ELECTRICAL WORKERS - EAST LOCAL 104*	09/01/2013	$19.25	$8.70	$2.85	$0.00	$30.80
For apprentice rates see "Apprentice- LINEMAN"						
JOURNEYMAN LINEMAN *OUTSIDE ELECTRICAL WORKERS - EAST LOCAL 104*	09/01/2013	$42.77	$8.70	$11.78	$0.00	$63.25

Classification	Effective Date	Base Wage	Health	Pension	Supplemental Unemployment	Total Rate

Apprentice - *LINEMAN (Outside Electrical) - East Local 104*

Effective Date - 09/01/2013

Step	percent	Apprentice Base Wage	Health	Pension	Supplemental Unemployment	Total Rate
1	60	$25.66	$8.70	$4.24	$0.00	$38.60
2	65	$27.80	$8.70	$4.71	$0.00	$41.21
3	70	$29.94	$8.70	$5.43	$0.00	$44.07
4	75	$32.08	$8.70	$6.16	$0.00	$46.94
5	80	$34.22	$8.70	$6.88	$0.00	$49.80
6	85	$36.35	$8.70	$7.62	$0.00	$52.67
7	90	$38.49	$8.70	$8.83	$0.00	$56.02

Notes:

Apprentice to Journeyworker Ratio:1:2

TELEDATA CABLE SPLICER *OUTSIDE ELECTRICAL WORKERS - EAST LOCAL 104*	07/16/2012	$26.33	$4.18	$2.79	$0.00	$33.30
TELEDATA LINEMAN/EQUIPMENT OPERATOR *OUTSIDE ELECTRICAL WORKERS - EAST LOCAL 104*	07/16/2012	$24.78	$4.18	$2.74	$0.00	$31.70
TELEDATA WIREMAN/INSTALLER/TECHNICIAN *OUTSIDE ELECTRICAL WORKERS - EAST LOCAL 104*	07/16/2012	$24.78	$4.18	$2.74	$0.00	$31.70
TREE TRIMMER *OUTSIDE ELECTRICAL WORKERS - EAST LOCAL 104*	01/29/2012	$17.18	$3.37	$0.00	$0.00	$20.55

This classification applies only to tree work done: (a) for a utility company, R.E.A. cooperative, or railroad or coal mining company, and (b) for the purpose of operating, maintaining, or repairing the utility company's equipment, and (c) by a person who is using hand or mechanical cutting methods and is not on the ground. This classification does not apply to wholesale tree removal.

TREE TRIMMER GROUNDMAN *OUTSIDE ELECTRICAL WORKERS - EAST LOCAL 104*	01/29/2012	$15.15	$3.37	$0.00	$0.00	$18.52

This classification applies only to tree work done: (a) for a utility company, R.E.A. cooperative, or railroad or coal mining company, and (b) for the purpose of operating, maintaining, or repairing the utility company's equipment, and (c) by a person who is using hand or mechanical cutting methods and is on the ground. This classification does not apply to wholesale tree removal.

Additional Apprentice Information:

Minimum wage rates for apprentices employed on public works projects are listed above as a percentage of the pre-determined hourly wage rate established by the Commissioner under the provisions of the M.G.L. c. 149, ss. 26-27D. Apprentice ratios are established by the Division of Apprenticeship Training pursuant to M.G.L. c. 23, ss. 11E-11L.

All apprentices must be registered with the Division of Apprenticeship Training in accordance with M.G.L. c. 23, ss. 11E-11L.

All steps are six months (1000 hours.)
Ratios are expressed in allowable number of apprentices to journeymen or fraction thereof, unless otherwise specified.

** Multiple ratios are listed in the comment field.
*** APP to JM; 1:1, 2:2, 2:3, 3:4, 4:4, 4:5, 4:6, 5:7, 6:7, 6:8, 6:9, 7:10, 8:10, 8:11, 8:12, 9:13, 10:13, 10:14, etc.
**** APP to JM; 1:1, 1:2, 2:3, 2:4, 3:5, 4:6, 4:7, 5:8, 6:9, 6:10, 7:11, 8:12, 8:13, 9:14, 10:15, 10:16, etc.

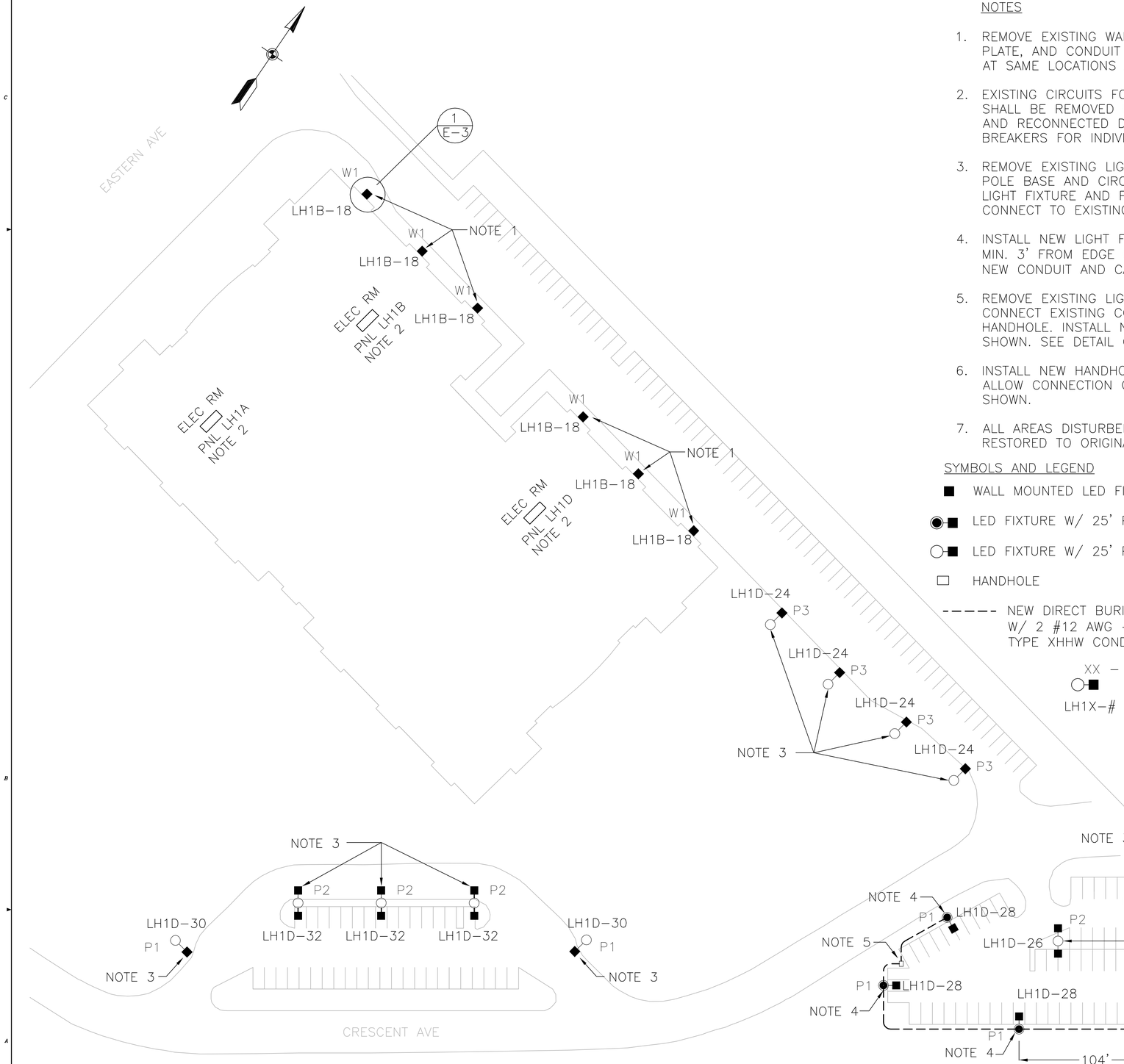

NOTES

1. REMOVE EXISTING WALL MOUNTED FIXTURE, MOUNTING PLATE, AND CONDUIT ELBOW. INSTALL NEW LIGHT FIXTURE AT SAME LOCATIONS AND CONNECT TO EXISTING CIRCUIT
2. EXISTING CIRCUITS FOR NEW LIGHTING TO BE INSTALLED SHALL BE REMOVED FROM EXISTING TIME CLOCK CONTROL AND RECONNECTED DIRECTLY TO EXISTING CIRCUIT BREAKERS FOR INDIVIDUAL PHOTOCELL CONTROL.
3. REMOVE EXISTING LIGHT FIXTURE AND POLE. EXISTING POLE BASE AND CIRCUIT WIRING TO REMAIN. INSTALL NEW LIGHT FIXTURE AND POLE ON EXISTING POLE BASE. CONNECT TO EXISTING CIRCUIT
4. INSTALL NEW LIGHT FIXTURE, POLE, AND POLE BASE – MIN. 3' FROM EDGE OF CURB TO POLE BASE. INSTALL NEW CONDUIT AND CABLES AS SHOWN.
5. REMOVE EXISTING LIGHT FIXTURES, POLE AND POLE BASE. CONNECT EXISTING CONDUIT AND CABLES TO NEW HANDHOLE. INSTALL NEW CONDUITS AND CABLES AS SHOWN. SEE DETAIL ON SHEET E-2
6. INSTALL NEW HANDHOLE IN EXISTING CONDUIT RUN TO ALLOW CONNECTION OF NEW CONDUIT AND CABLES AS SHOWN.
7. ALL AREAS DISTURBED BY THE LIGHTING WORK SHALL BE RESTORED TO ORIGINAL CONDITIONS.

SYMBOLS AND LEGEND

- WALL MOUNTED LED FIXTURE
- LED FIXTURE W/ 25' POLE AND NEW CONCRETE POLE BASE
- LED FIXTURE W/ 25' POLE
- HANDHOLE
- ----- NEW DIRECT BURIED 1" PVC CONDUIT W/ 2 #12 AWG + 1 #12 AWG GND TYPE XHHW CONDUCTORS
- XX – FIXTURE TYPE (SEE SHEET E-4 FOR FIXTURE SCHEDULE)
- LH1X-# – PANEL AND CIRCUIT NUMBER

JACOBS
Jacobs Engineering Group, Inc.
343 Congress Street
Suite 2100
Boston, MA 02210
V: 617.242.9222
F: 617.242.9824

CONSULTANTS

Revision:

Date:	By:	Description:

CHELSEA SCHOOL DEPT
500 BROADWAY
CHELSEA, MA. 02150

MARY C. BURKE SCHOOL
PROPOSED LIGHTING LAYOUT

300 CRESCENT AVENUE
CHELSEA, MA.

Key Plan:

Scale: 1" = 48'

Jacobs Project No.: R7W71606

Drawing Title:
ELECTRICAL AND LIGHTING PLAN

Date: 27 NOVEMBER 2012

Designed By: MR
Drawn By: MR
Checked By:

Drawing No.: E-1

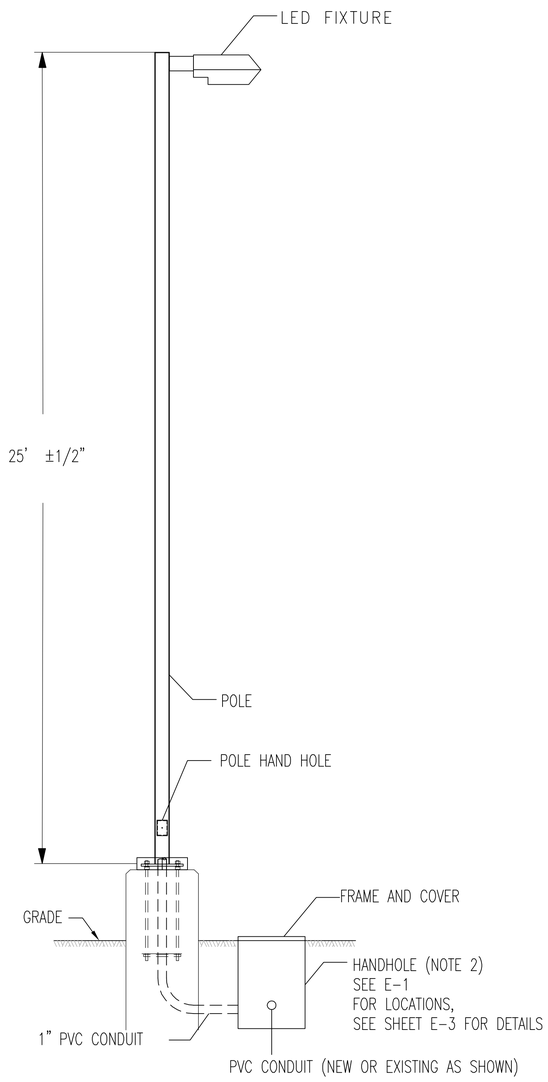

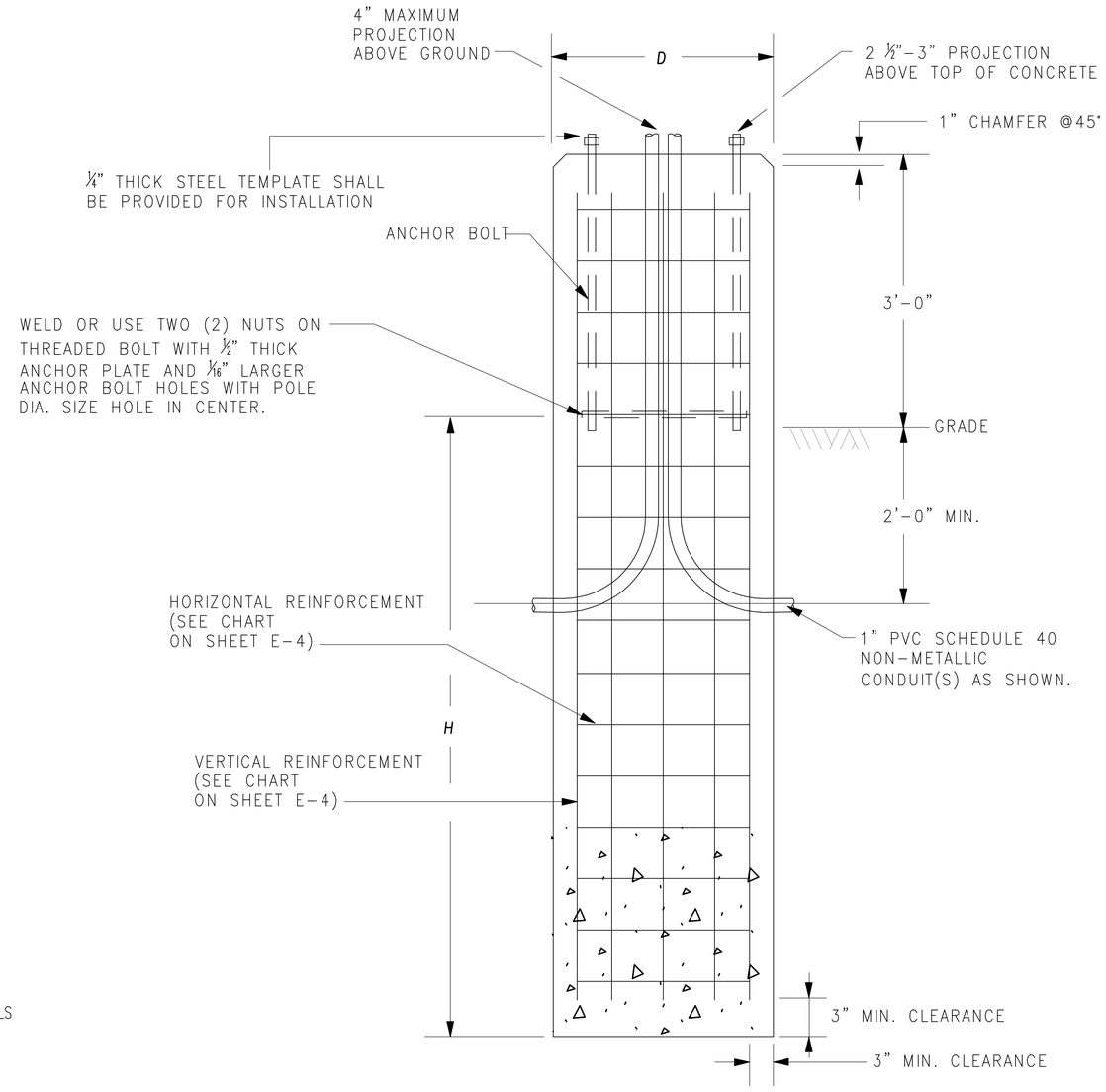

SECTION A–A

NOTES

1. CONTRACTOR TO COORDINATE FOUNDATION WITH LIGHTING POLE. PROVIDE DRAWINGS STAMPED BY MASS PROFESSIONAL ENGINEER FOR ALL FOUNDATIONS.

2. ORIENTATION OF HANDHOLE MAY VARY PER POLE LOCATION

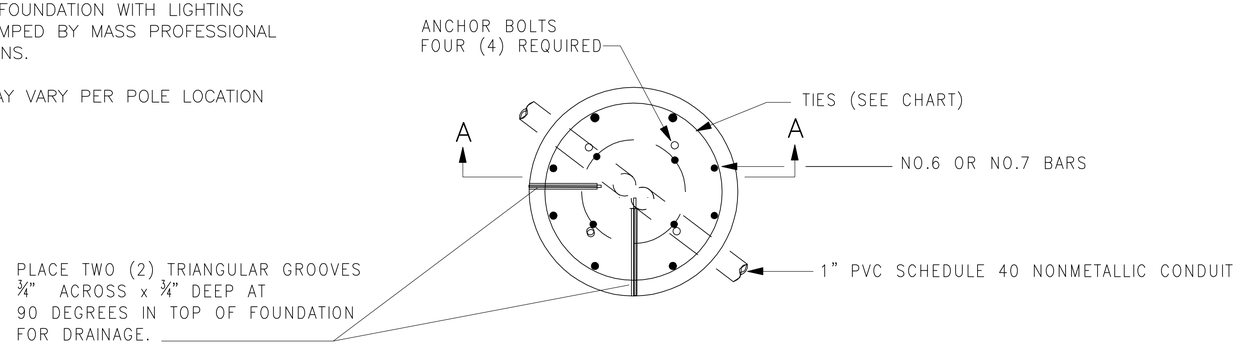

LIGHTING FOUNDATION – PLAN VIEW

JACOBS
Jacobs Engineering Group, Inc.

343 Congress Street
Suite 2100
Boston, MA 02210

V: 617.242.9222
F: 617.242.9824

CONSULTANTS

Revision:

Date:	By:	Description:

CHELSEA SCHOOL DEPT
500 BROADWAY
CHELSEA, MA. 02150

MARY C. BURKE SCHOOL
PROPOSED LIGHTING LAYOUT

300 CRESCENT AVENUE
CHELSEA, MA.

Key Plan:

Scale: NTS

Jacobs Project No.: R7W71606

Drawing Title:
LIGHTING FOUNDATION DETAILS

Date: 27 NOVEMBER 2012

Designed By: MR
Drawn By: MR
Checked By:

Drawing No.: E-2

NOTES

1. PROVIDE HEAVY DUTY CAST IRON FRAME AND COVER FOR HANDHOLE.
2. HANDHOLE TO BE 4000 PSI CONCRETE.
3. COORDINATE LOCATION WITH EXISTING CONDUIT IF PRESENT.

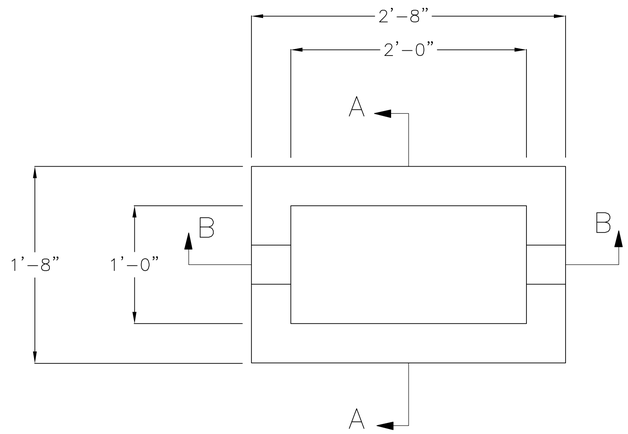

HANDHOLE – PLAN VIEW

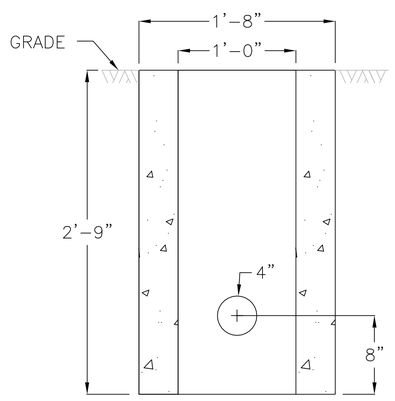

SECTION A–A

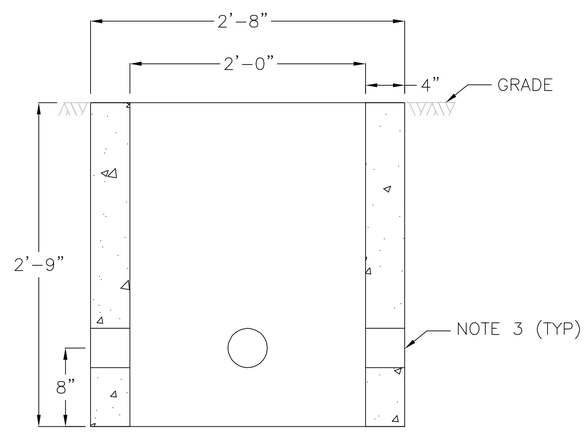

SECTION B–B

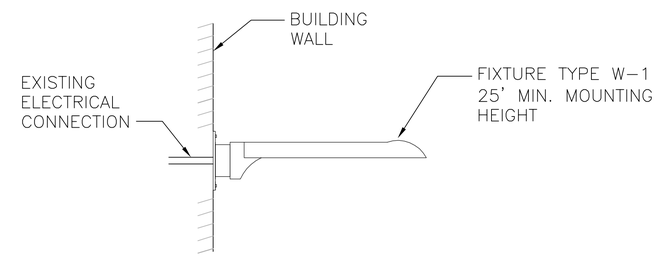

1 / E–1 W–1 FIXTURE MOUNTING DETAIL
NOT TO SCALE

JACOBS
Jacobs Engineering Group, Inc.

343 Congress Street
Suite 2100
Boston, MA 02210

V: 617.242.9222
F: 617.242.9824

CONSULTANTS

Revision:

Date:	By:	Description:

CHELSEA SCHOOL DEPT
500 BROADWAY
CHELSEA, MA. 02150

MARY C. BURKE SCHOOL
PROPOSED LIGHTING LAYOUT

300 CRESCENT AVENUE
CHELSEA, MA.

Key Plan:

Scale: NTS

Jacobs Project No.: R7W71606

Drawing Title:
HANDHOLE AND FIXTURE MOUNTING DETAILS

Date: 27 NOVEMBER 2012

Designed By: MR
Drawn By: MR
Checked By:

Drawing No.: E-3

LIGHTING SCHEDULE

SYMBOL	FIXTURE TYPE	MANUFACTURER	QUANTITY	LAMP	SYSTEM WATTS	VOLTAGE	MOUNTING	NOTES
○-■	P1	LITHONIA # DSX1LED-2-30B530/50K-SR3-277-SPA-DBLXD VISIONAIRE # EL2-1-T3-72LC-3-55K-UNV-BOA-BK BETA LED # ARE-EDG-3M-DA-08-D-UL-BK-525-P	8	LED	106 114 133	277	SINGLE	PROVIDE NEMA TWIST LOCK TYPE PHOTOCELL NOMINAL POLE HEIGHT: 25' SQUARE POLE - FOR EXISTING FOUNDATIONS TO REMAIN, SUPPLY POLE TO MATCH EXISTING FOUNDATION BOLT PATTERN. POLE AND FIXTURE COLOR: BLACK IES TYPE III DISTRIBUTION
■-○-■	P2	LITHONIA # DSX1LED-2-30B530/50K-SR3-277-SPA-DBLXD VISIONAIRE # EL2-1-T3-72LC-3-55K-UNV-KM-BK BETA LED # ARE-EDG-3M-DA-08-D-UL-BK-525-P	5	LED	106 114 133	277	DOUBLE	PROVIDE NEMA TWIST LOCK TYPE PHOTOCELL NOMINAL POLE HEIGHT: 25' SQUARE POLE - FOR EXISTING FOUNDATIONS TO REMAIN, SUPPLY POLE TO MATCH EXISTING FOUNDATION BOLT PATTERN. POLE AND FIXTURE COLOR: BLACK IES TYPE III DISTRIBUTION
○-■	P3	LITHONIA # DSX1LED-2-30B530/50K-FT-277-SPA-DBLXD GE LIGHTING # EAMM-0-F-57-A-2-A-BLCK LSI INDUSTRIES # XAM3-FT-LED-119-350-CW-UE-BLK-PCR	4	LED	106 126 148	277	SINGLE	PROVIDE NEMA TWIST LOCK TYPE PHOTOCELL NOMINAL POLE HEIGHT: 25' SQUARE POLE - FOR EXISTING FOUNDATIONS TO REMAIN, PROVIDE POLE TO MATCH EXISTING FOUNDATION BOLT PATTERN. POLE AND FIXTURE COLOR: BLACK IES FORWARD THROW DISTRIBTUION
■	W1	LITHONIA # DSX2LED-1-120B53050K-SR3-277-WBA-DBLXD VISIONAIRE # EL2-3-T4-144LC-3-55K-UNV-KM-BK BETA LED # ARE-EDG-3M-DA-20-D-UL-BK-525-P	6	LED	210 168 221	277	WALL	PROVIDE NEMA TWIST LOCK TYPE PHOTOCELL FIXTURE COLOR: BLACK IES TYPE III DISTRIBUTION

LIGHT POLE FOUNDATION DETAILS

MOUNTING HEIGHT FT.	ANCHOR BOLT DIMENSIONS P" x X" IN. x IN.	FOUNDATION DIMENSIONS		FOUNDATION REINFORCEMENT		CONCRETE REQUIRED C.Y.
		DIAMETER D FT.	HEIGHT H FT.	VERTICAL REINF. BARS SIZE	HORIZONTAL REINF. SIZE	
25	**	**	**	8 NO.7	NO.3 TIES AT 1'-0" C.C.	AS NEEDED

** VARY PER MANUFACTURER'S RECOMMENDATION

JACOBS
Jacobs Engineering Group, Inc.

343 Congress Street
Suite 2100
Boston, MA 02210

V: 617.242.9222
F: 617.242.9824

CONSULTANTS

Revision:

Date:	By:	Description:

CHELSEA SCHOOL DEPT
500 BROADWAY
CHELSEA, MA. 02150

MARY C. BURKE SCHOOL
PROPOSED LIGHTING LAYOUT

300 CRESCENT AVENUE
CHELSEA, MA.

Key Plan:

Scale: NTS

Jacobs Project No.: R7W71606

Drawing Title:
SCHEDULES

Date: 27 NOVEMBER 2012

Designed By: MR
Drawn By: MR
Checked By:

Drawing No.: E-4